TimberIN
BALTIC SPA & SAUNAS

PLEASE NOTE

The measurements in the drawings and on the TimberIN websites are approximate. They will differ slightly from the measurements of the finished product, because our products are individually designed and hand-made. If one or more measurements are very important to you, please tell us before you order. We will pay close attention to your requirements during production, so that the product is made as closely as possible to them.

Table of Contents

NORDIC CORE 1800 3

NORDIC CORE 2000 16

TiMberin

TECHNICAL DATA

NORDIC CORE 1800

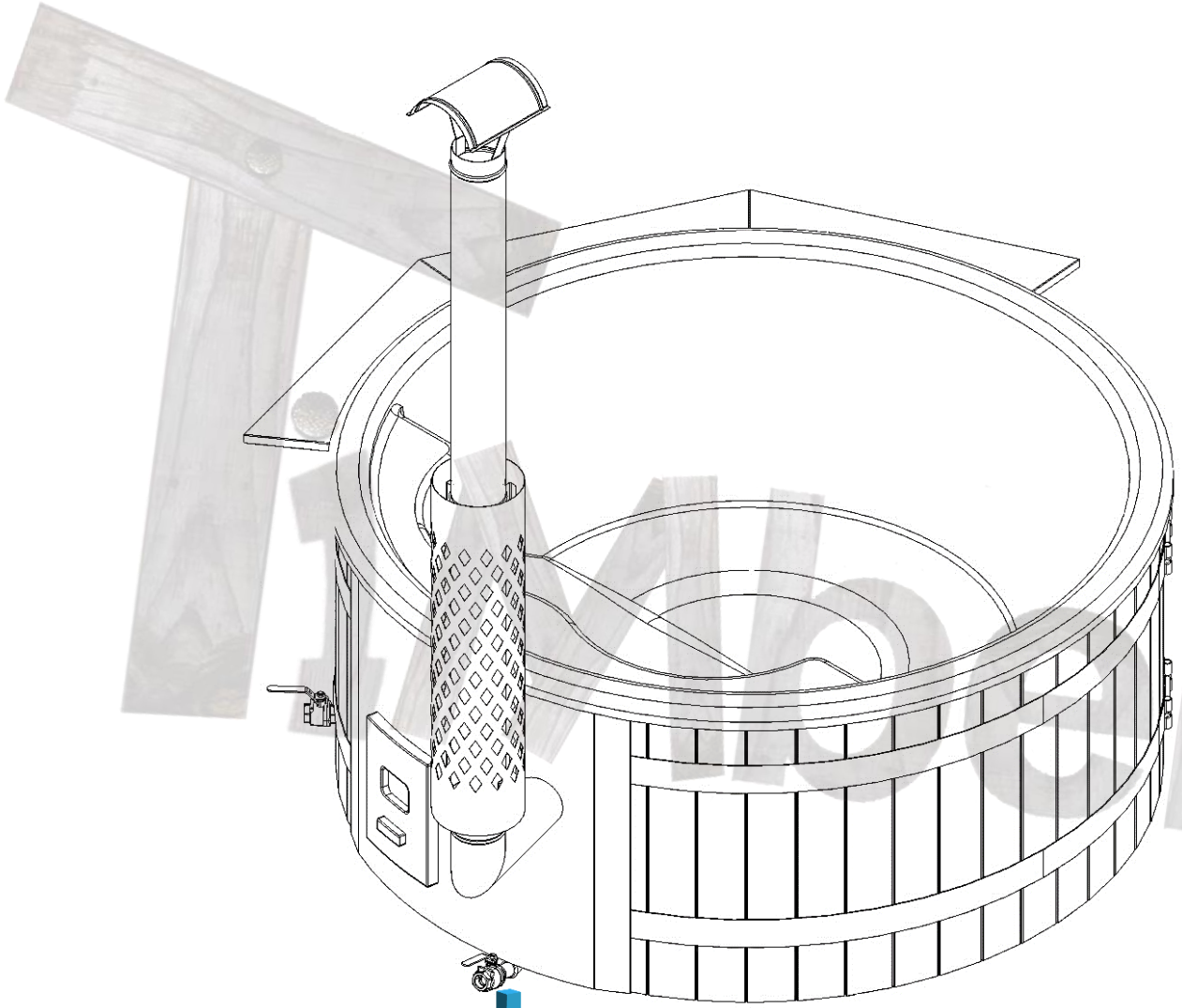

3D view of this model

MODEL	NORDIC CORE
No. of bathers	4-6
Water capacity	1300 l
STAIRS	A or C
LED	optional
HYDRO MASSAGE	optional
AIR MASSAGE	optional
SAND FILTRATION	optional
INSULATION	included
ACRYLIC SHELL	optional
HEATING OPTIONS	CLADDING
Integrated wood stove	Spruce
Hybrid: electric + wood	Larch
Hybrid: heat pump + wood	Thermowood
Integrated pellet stove	Oak
	WPC black
	WPC brown

ACRYLIC SHELL FOR THE INTEGRATED STOVE – Ø 2.0 M

Nordic Core™ 1800 (4–6 persons)

TimberIN
BALTIC SPA & SAUNAS

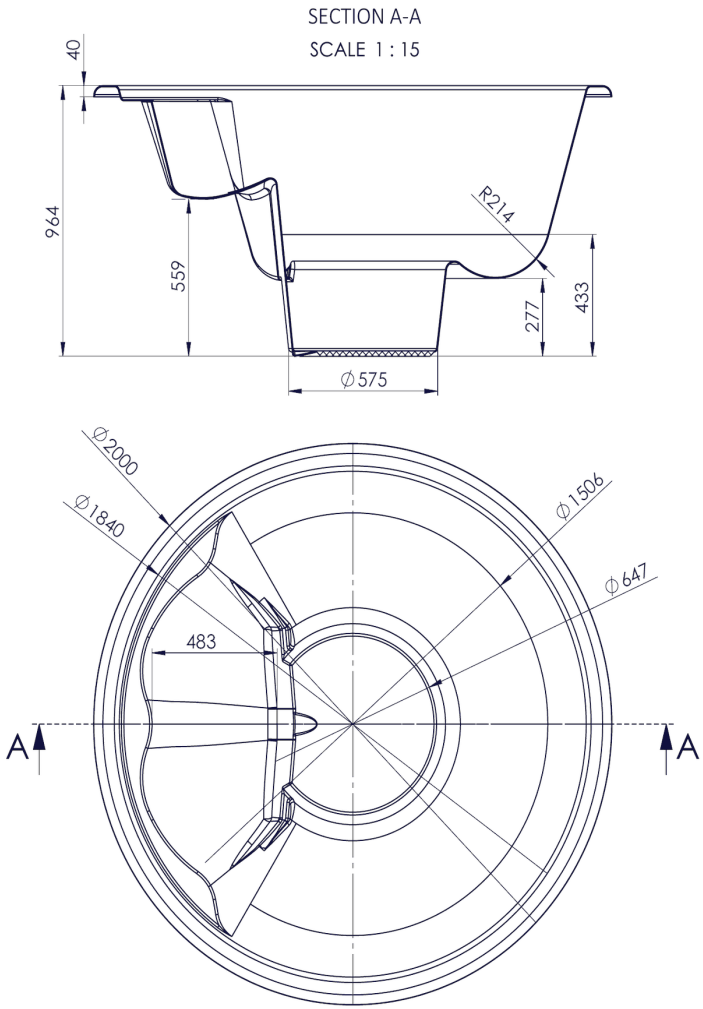



TimberIN Nordic Core™
Acrylic shell for the integrated stove – Ø 2.0 m
The acrylic shell replaces the fibreglass shell.
Dimensions in mm · drawing not to scale when printed
www.timberin.com

ACRYLIC SHELL COLOURS

Nordic Core™

For the acrylic shell only (the fibreglass shell has its own colours). White Pearl is preselected; no colour costs extra.

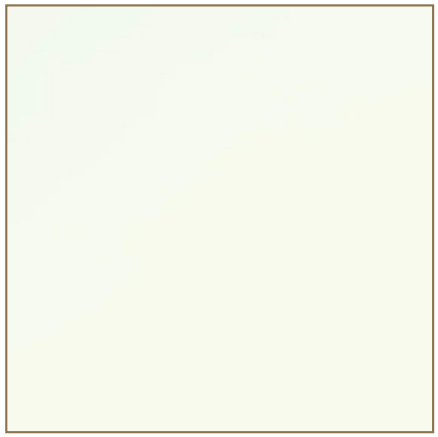

White Pearl
(preselected)



Grey Metal



Coffee Clouds



Pearl Black Clouds

Colours on screen and in print may differ slightly from the real surface.

www.timberin.com

GENERAL INFO

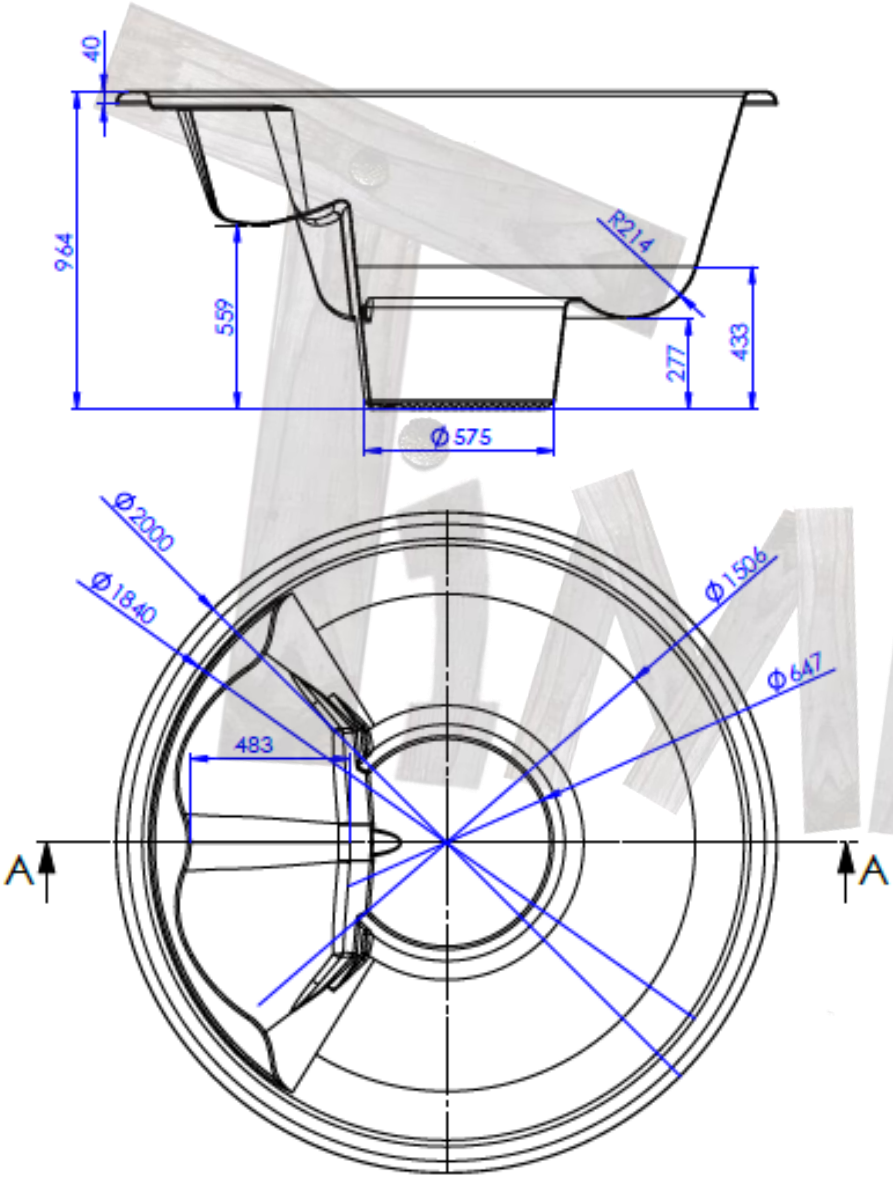

MODEL	NORDIC CORE
Inside diameter	1800 mm
Outside diameter	2000 mm
Chimney length	2000 mm

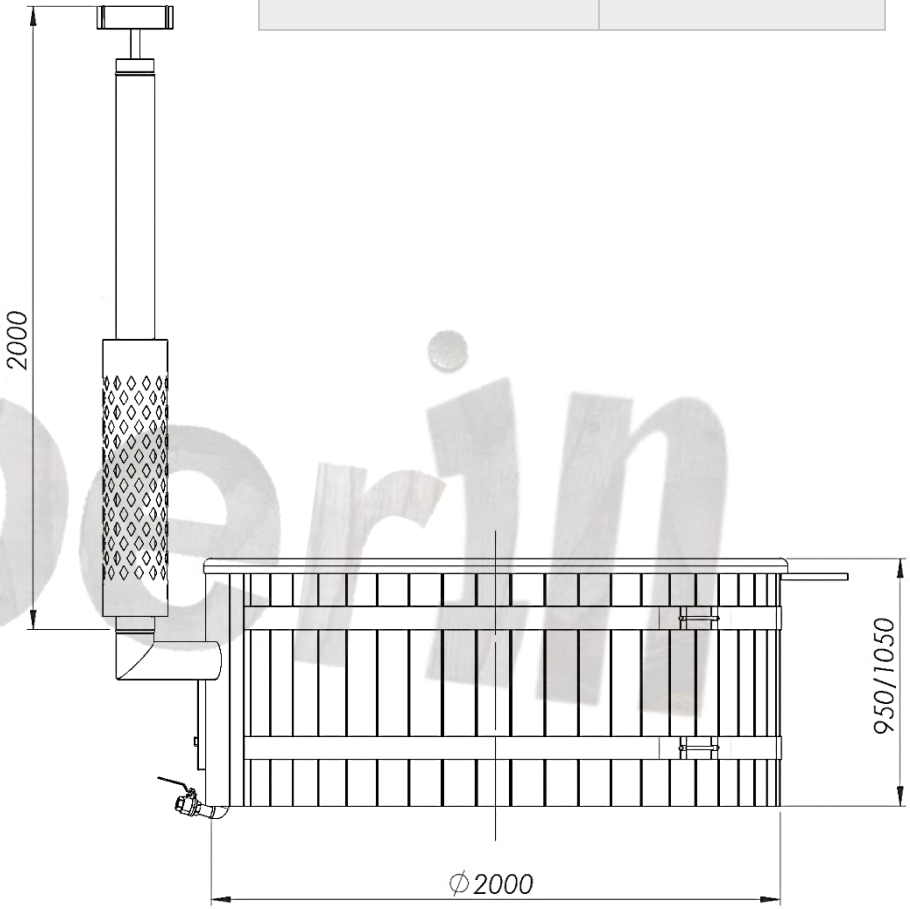

Alberin

GENERAL INFO (2)

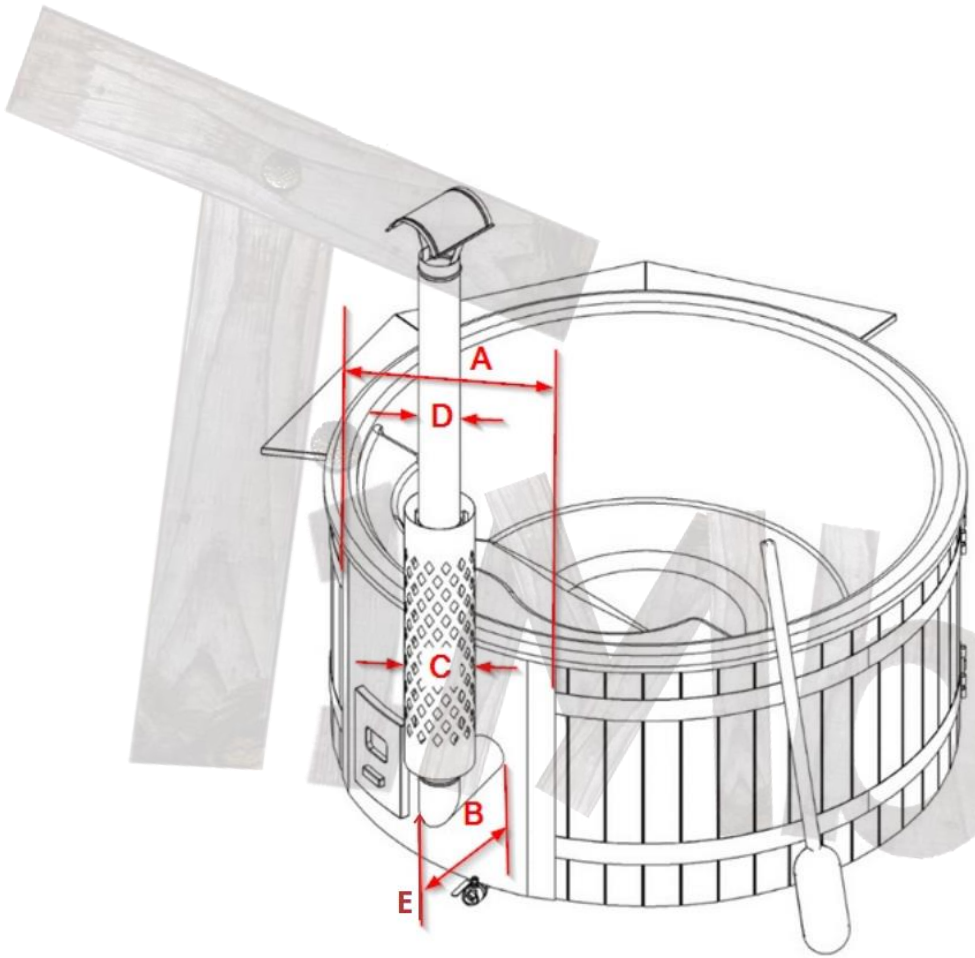

A- 960 mm
B- 280 mm
C- 210 mm
D- 120 mm
E- 330 mm

GENERAL INFO (3)

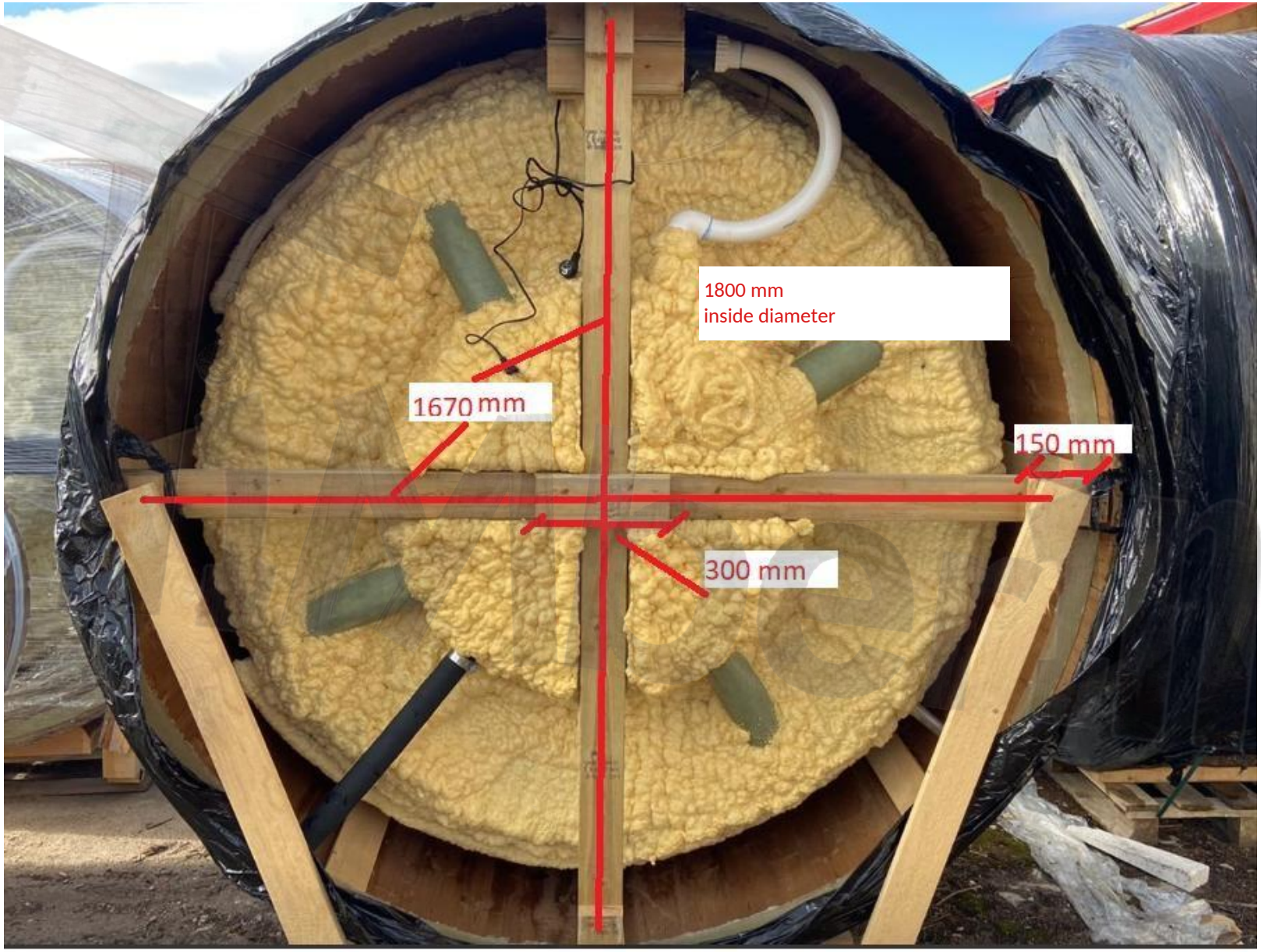

A TYPE STAIRS

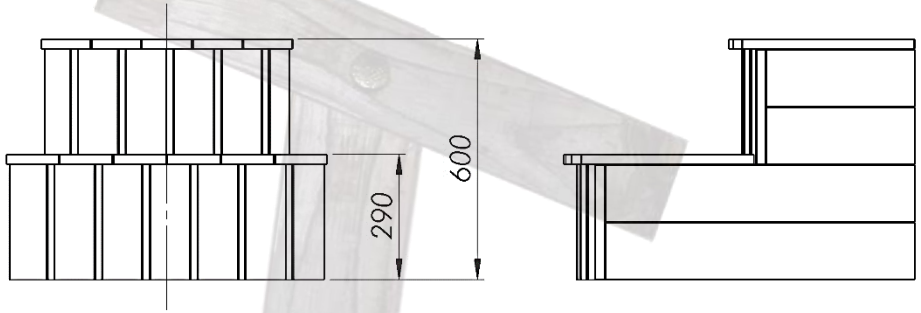

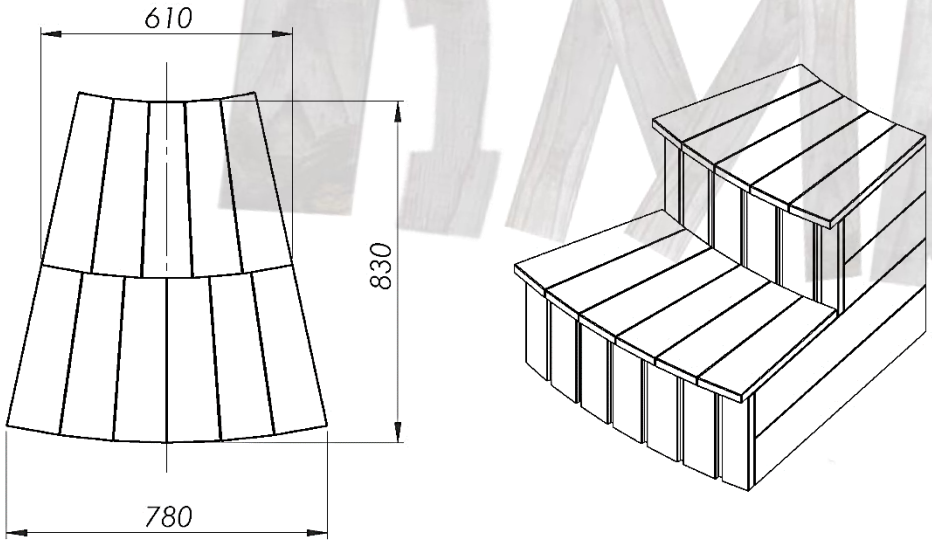

MODEL	STAIRS A TYPE
Height total	600 mm
First step height	290 mm
Width total	780 mm
Length	830 mm
Also offered	C type

timberin

WOODEN LID + WOODEN ROUND EDGE (SILL)

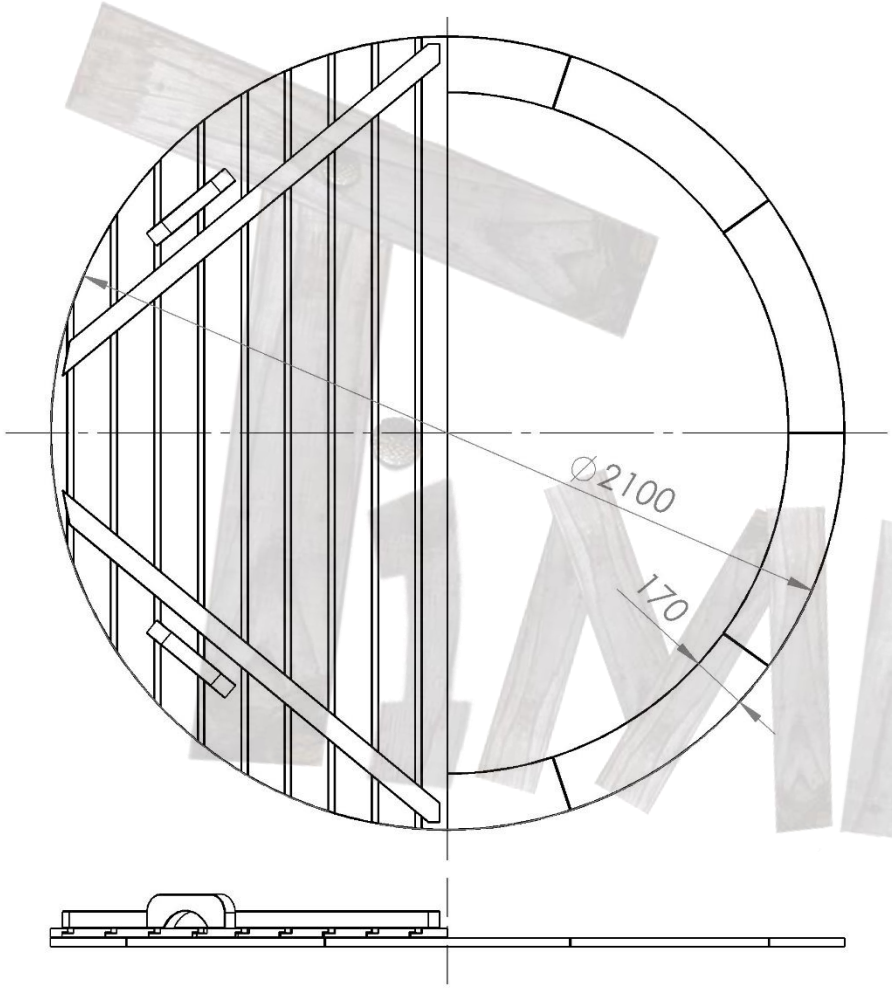

MODEL	WOODEN PARTS
Wooden lid diameter	2100 mm
Wooden sill width	170 mm
Spruce or Thermowood only	

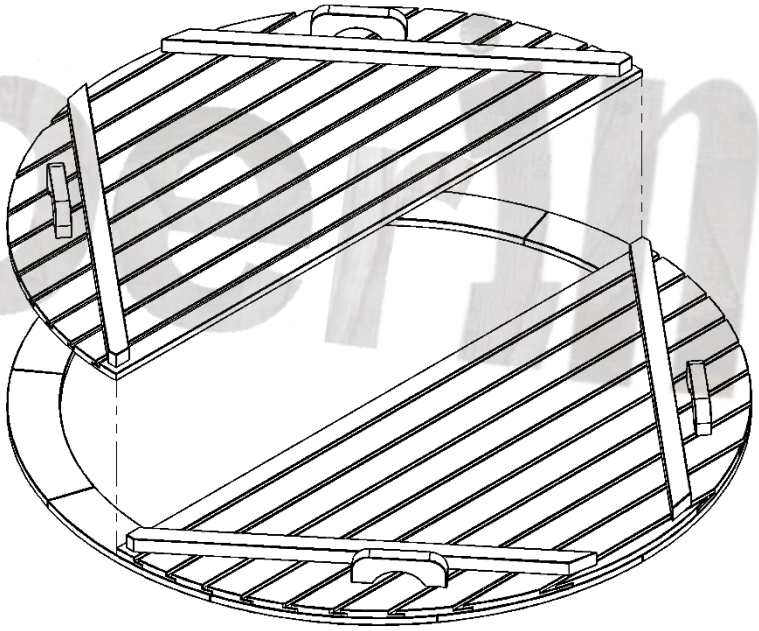

FIBERGLASS LID

MODEL	FIBERGLASS LID
Diameter	2030 mm
Insulation thickness (if chosen)	10 mm

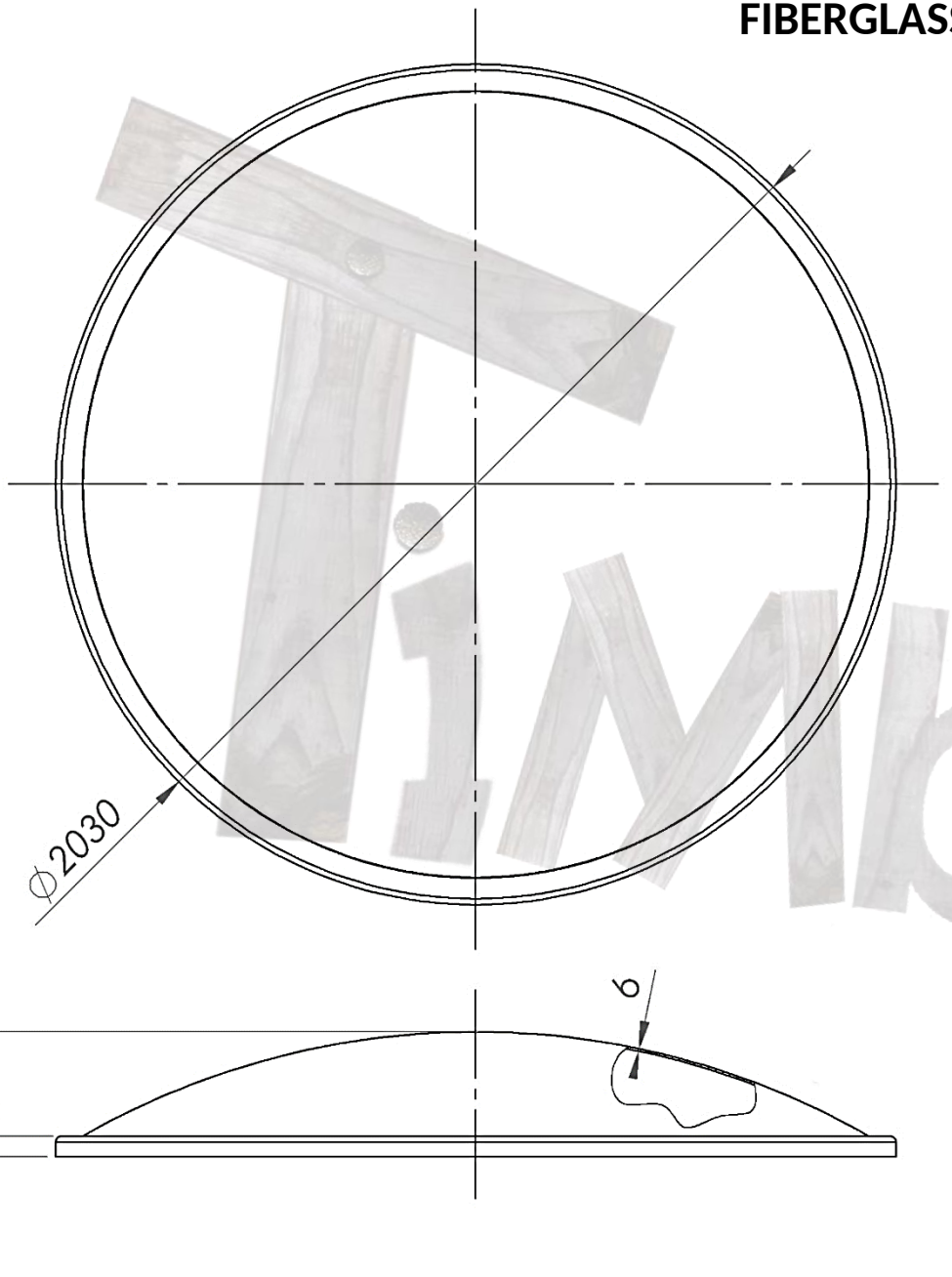



timberin

LEATHER LID

MODEL	LEATHER LID
Diameter	2000 mm
Side leather overlay	150 mm
Insulation thickness	70 mm

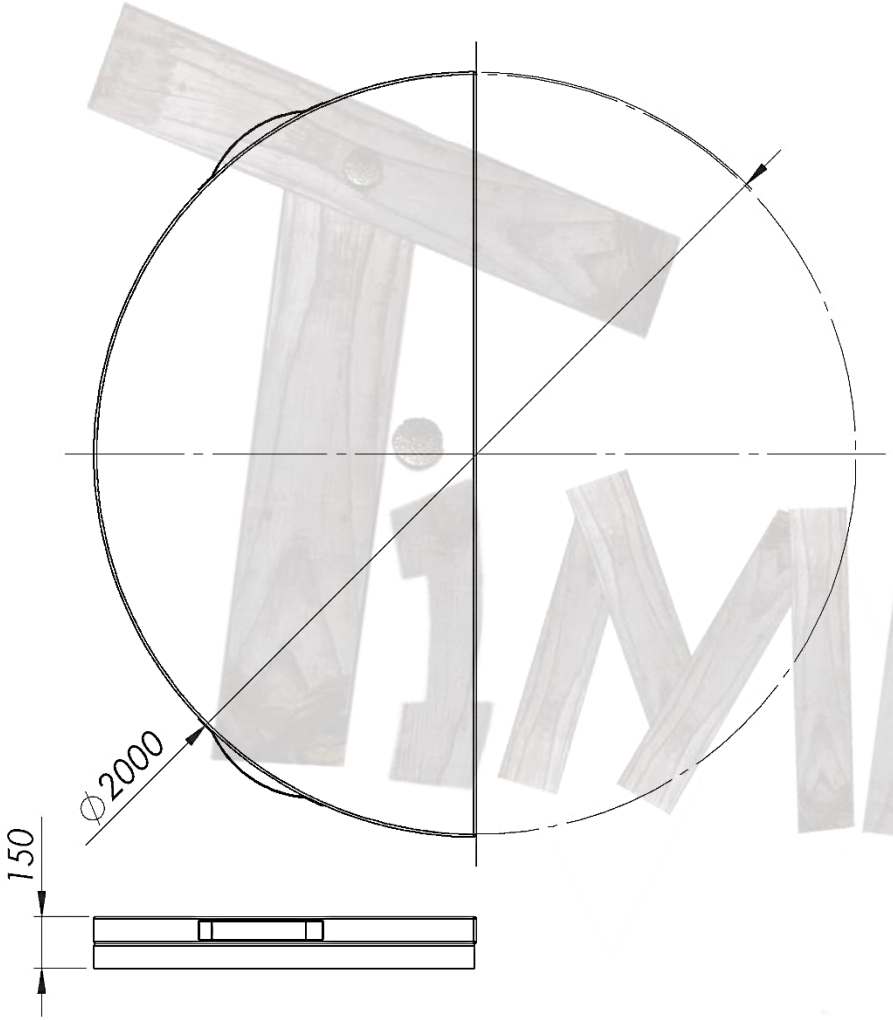

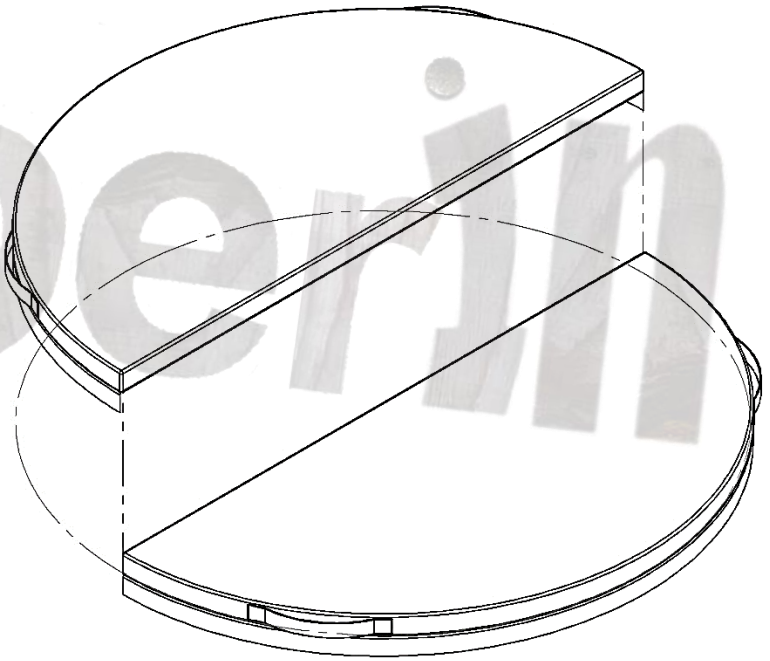

TiMberin

EXTERNAL WATER RELEASE TAP

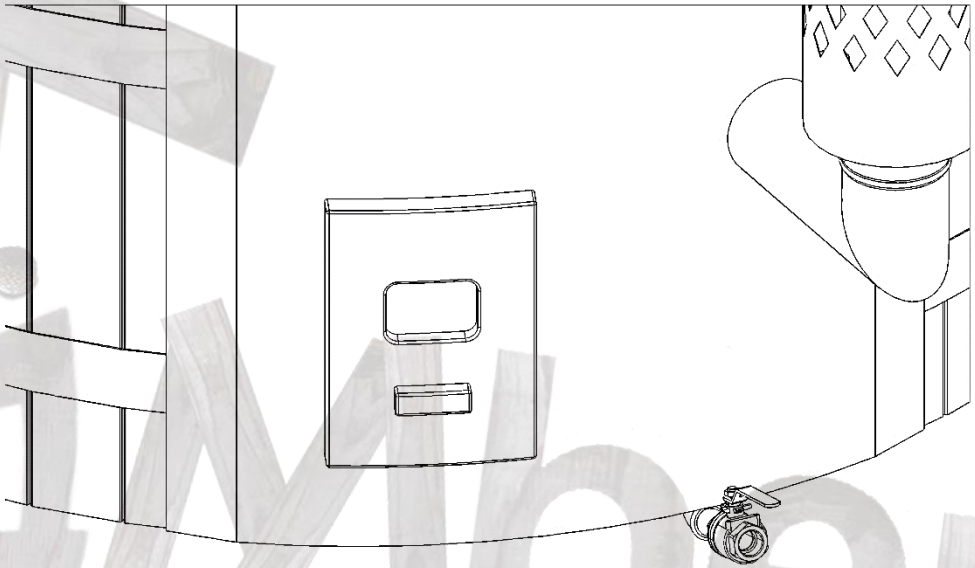

MODEL	CONNECTIONS
Filter connections (AISI 316) installed upon request	1 inch / 25 mm
External water release tap (AISI 316)	1 inch / 25 mm

WOODEN BOXES FOR SPA SYSTEMS STORAGE

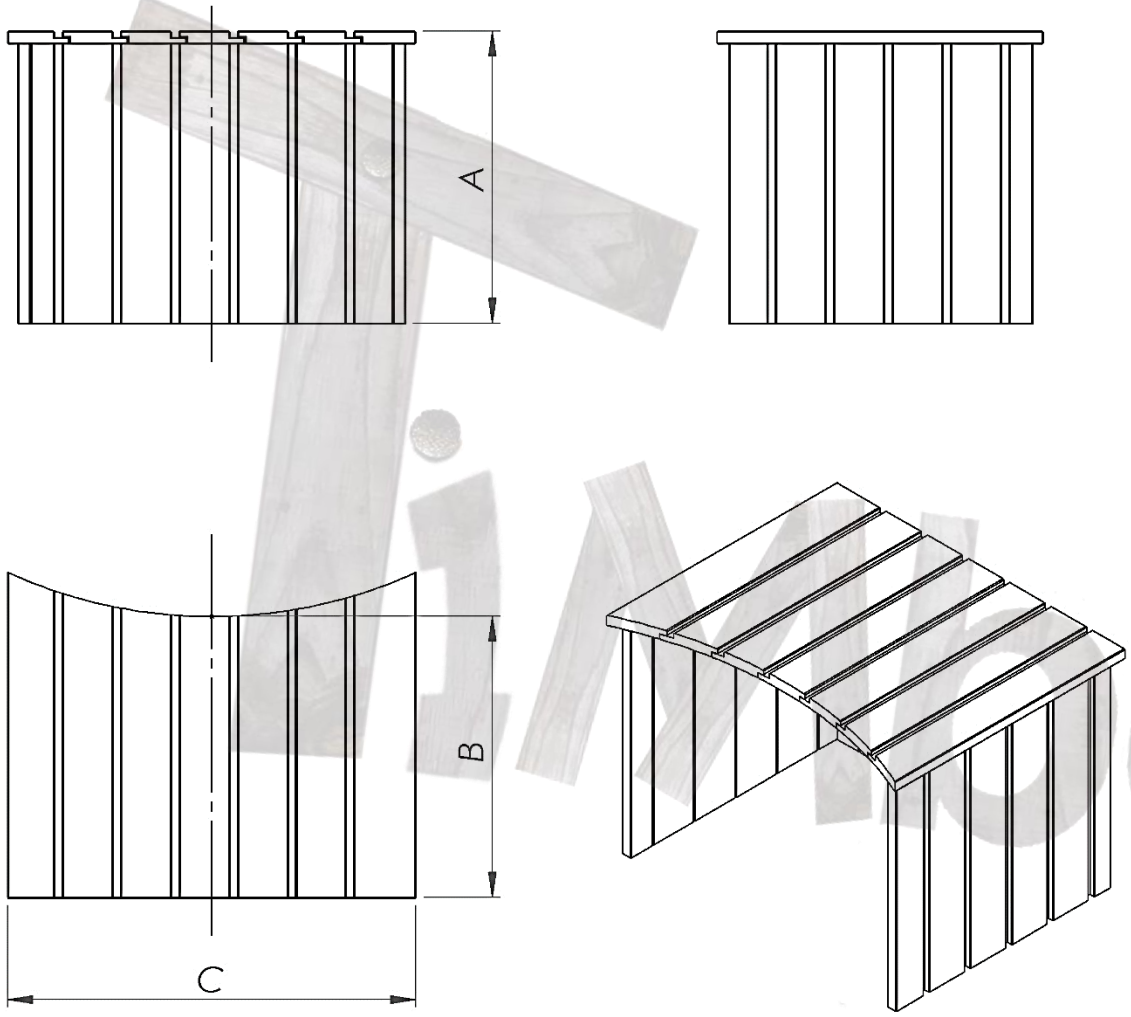

MODEL	WOODEN BOX
Sand filtration with wooden box	A: 800 mm B: 700 mm C: 600 mm
Electric heater with wooden box	A: 400 mm B: 600 mm C: 600 mm
Sand filtration + Electric heater with wooden box	A: 800 mm B: 700 mm C: 600 mm

iModern

NORDIC CORE 1800 DELIVERY INFO

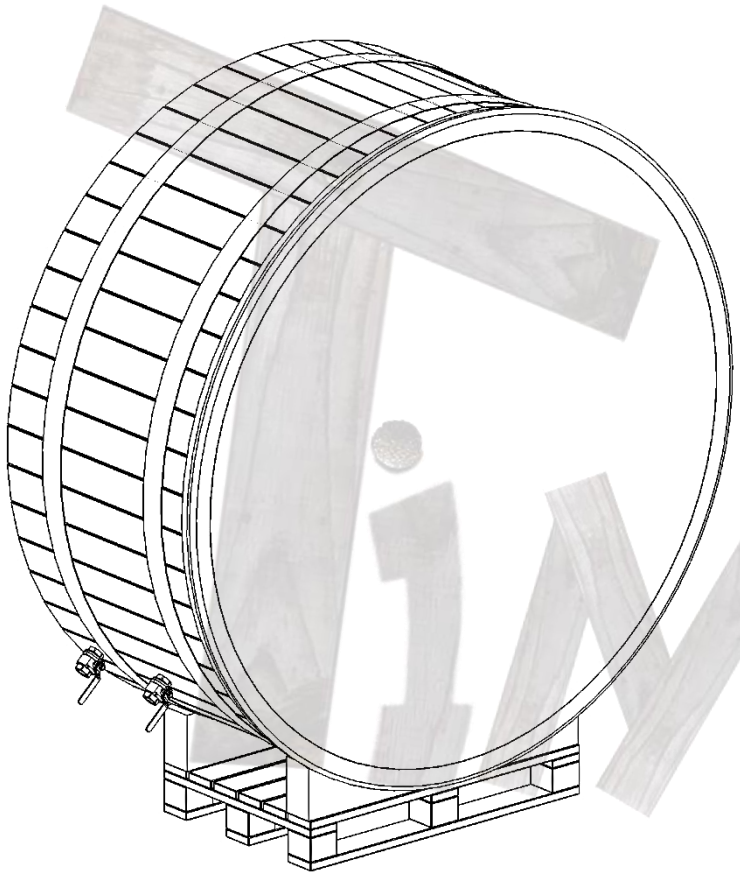

MODEL	CORE DELIVERY
On the pallet packed model measurements:	Height: 2200 mm Width: 1300 mm Length: 2100 mm
Additional side package (stairs)	Height: 900 mm Width: 800 mm Length: 1000 mm

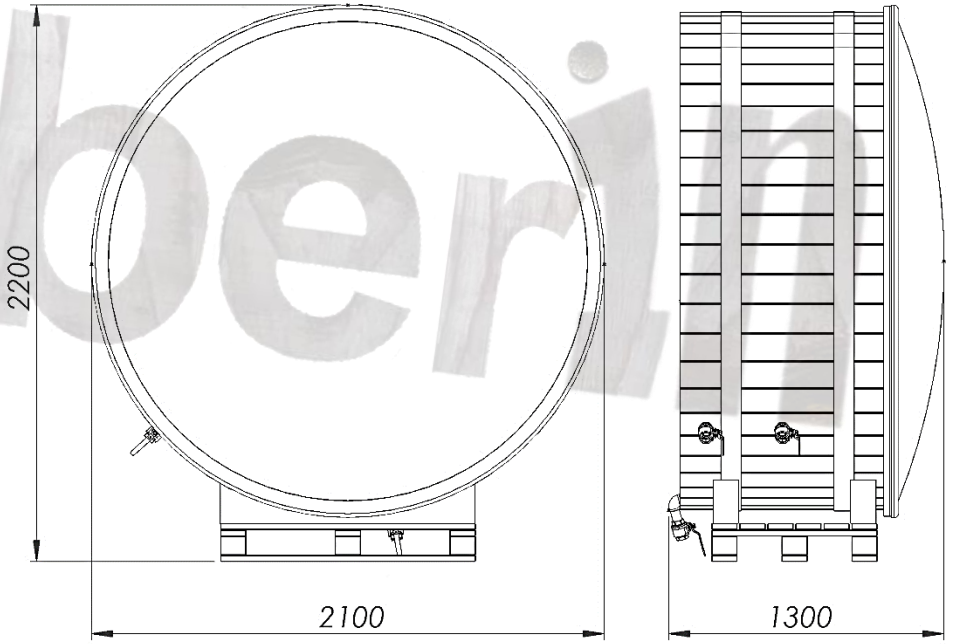

iMberia

TECHNICAL DATA

NORDIC CORE 2000

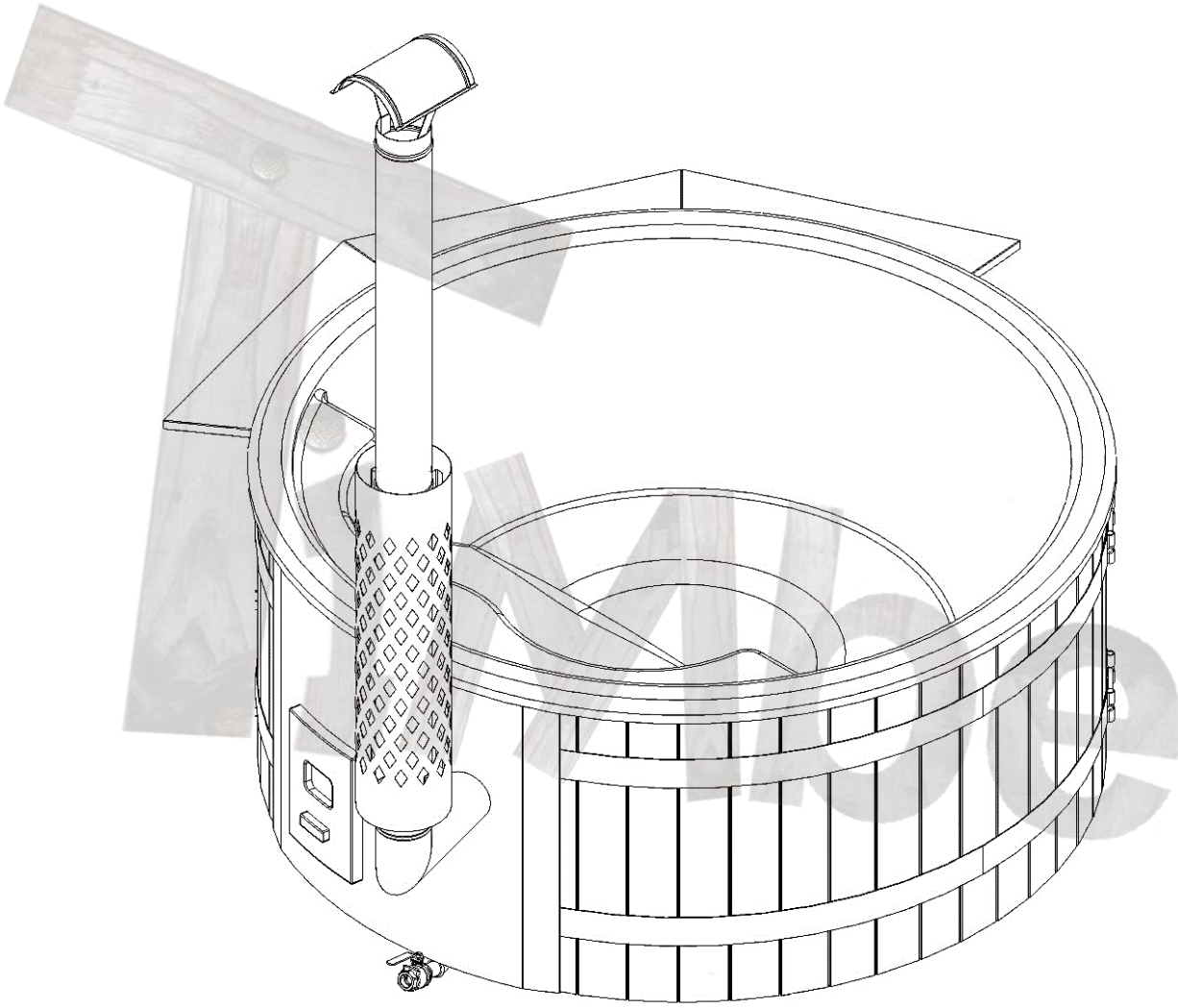

MODEL	NORDIC CORE
No. of bathers	6-8
Water capacity	1500 l
STAIRS	A or C
LED	optional
HYDRO MASSAGE	optional
AIR MASSAGE	optional
SAND FILTRATION	optional
INSULATION	included
ACRYLIC SHELL	optional
HEATING OPTIONS	CLADDING
Integrated wood stove	Spruce
Hybrid: electric + wood	Larch
Hybrid: heat pump + wood	Thermowood
Integrated pellet stove	Oak
	WPC black
	WPC brown

3D view of this model

ACRYLIC SHELL FOR THE INTEGRATED STOVE – Ø 2.2 M

Nordic Core™ 2000 (6–8 persons)

TimberIN
BALTIC SPA & SAUNAS

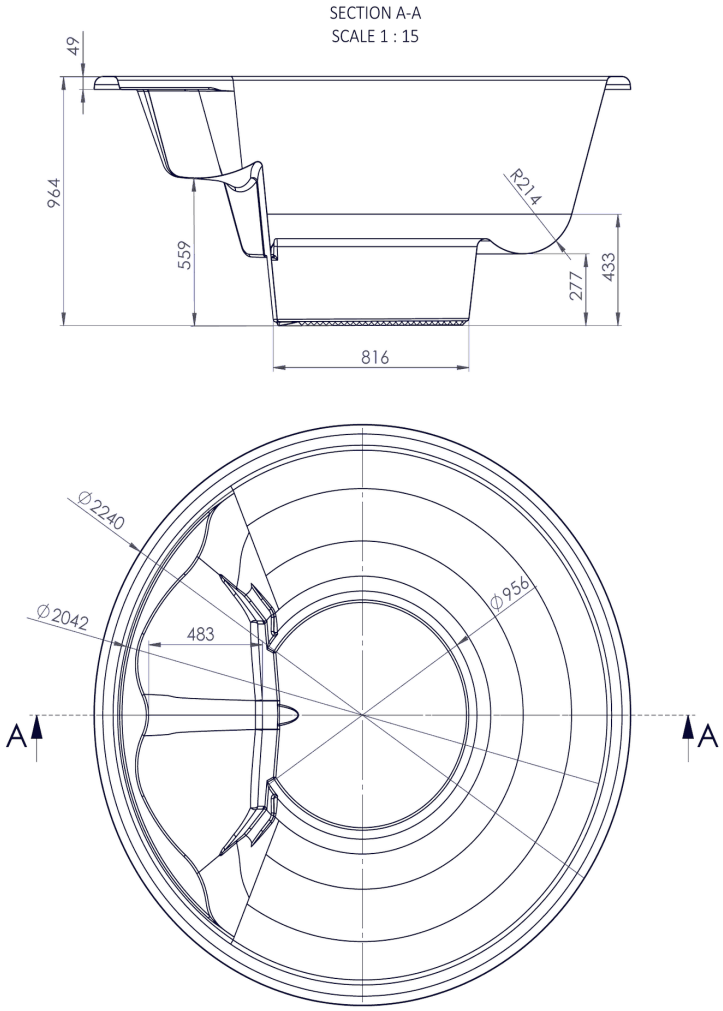

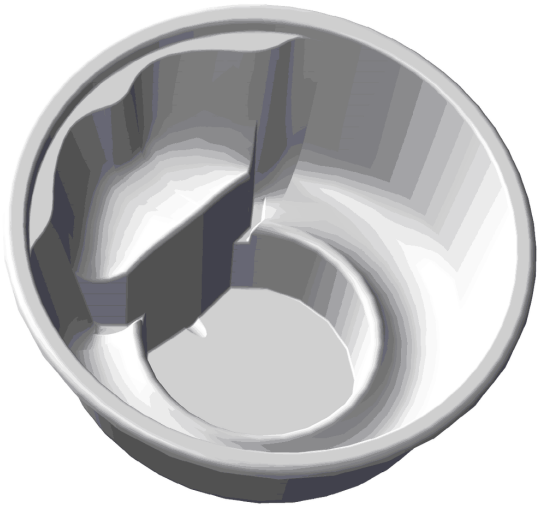

TimberIN Nordic Core™

Acrylic shell for the integrated stove – Ø 2.2 m
The acrylic shell replaces the fibreglass shell.
Dimensions in mm · drawing not to scale when printed
www.timberin.com

GENERAL INFO

MODEL	NORDIC CORE
Inside diameter	2030 mm
Outside diameter	2250 mm
Chimney length	2000 mm

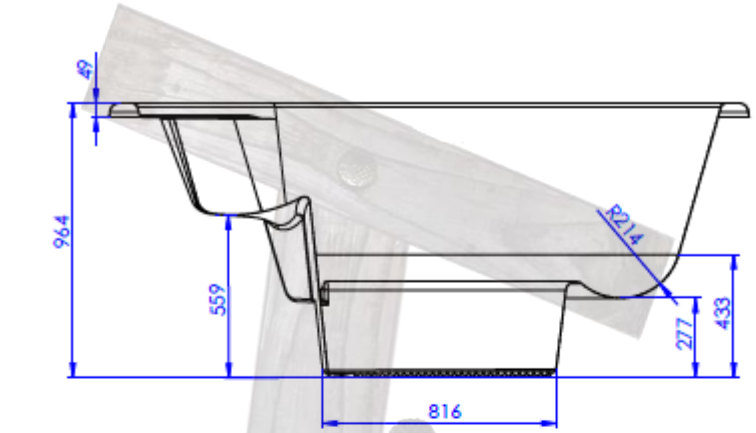

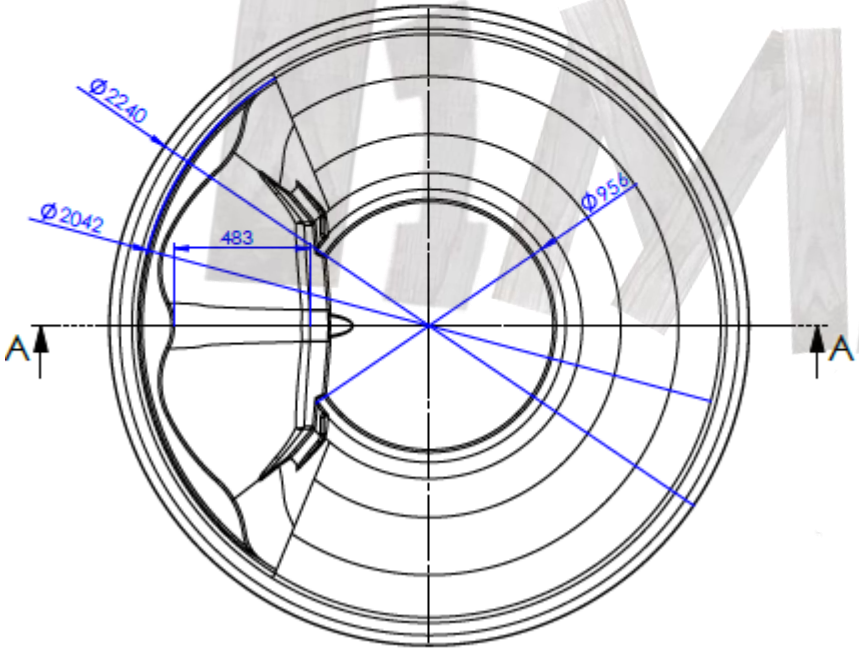

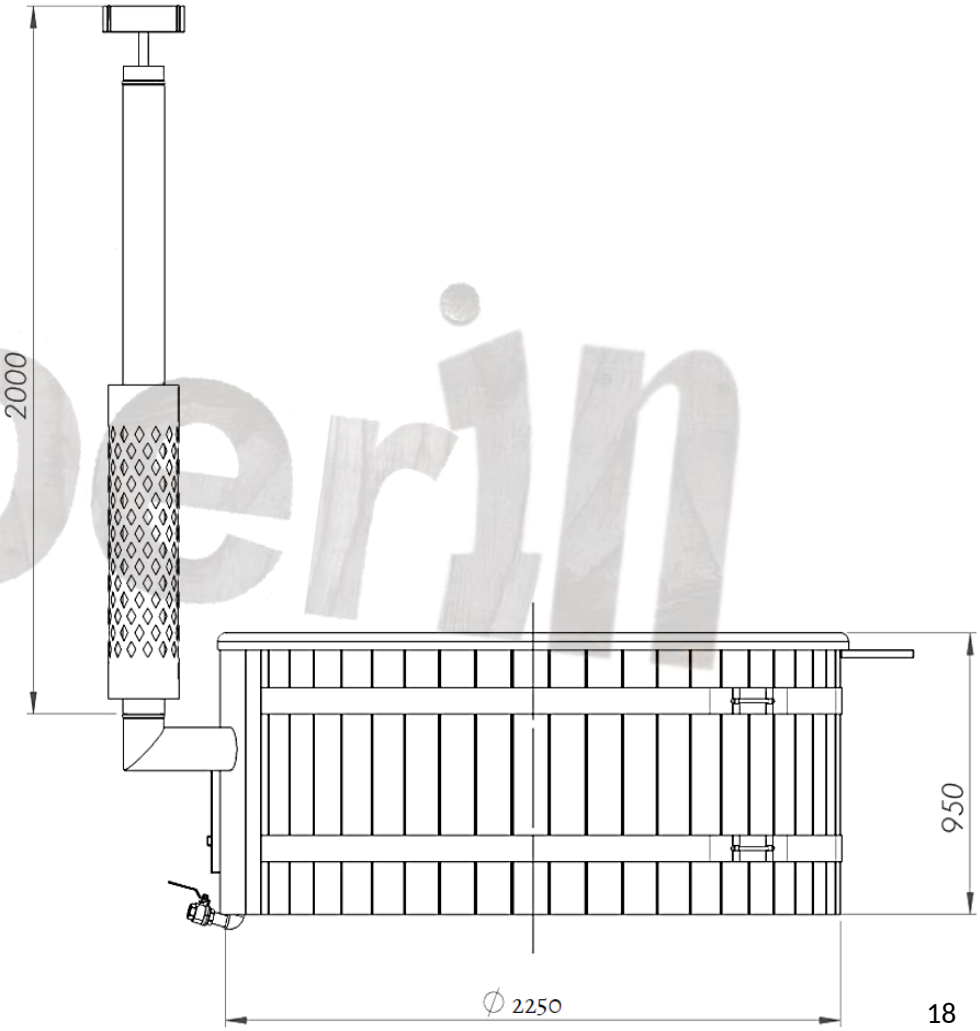

Aberin

GENERAL INFO (2)

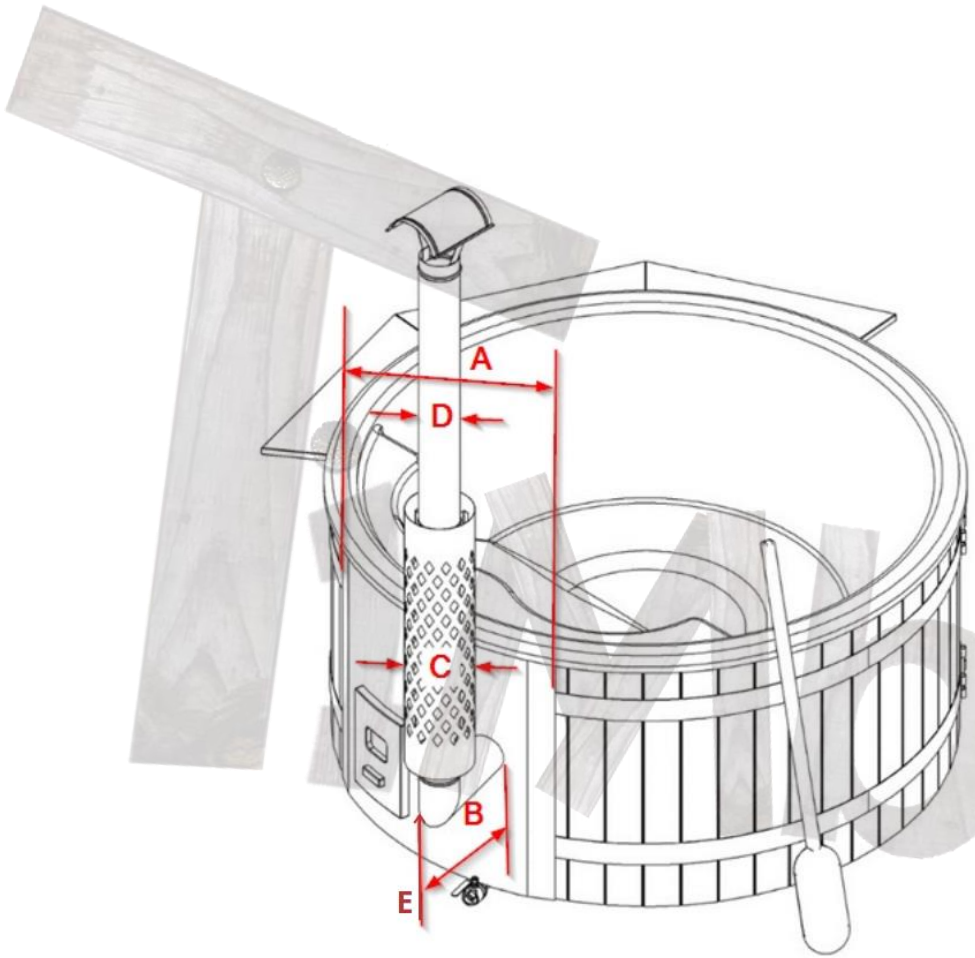

A- 960 mm
B- 280 mm
C- 210 mm
D- 120 mm
E- 330 mm

GENERAL INFO (3)

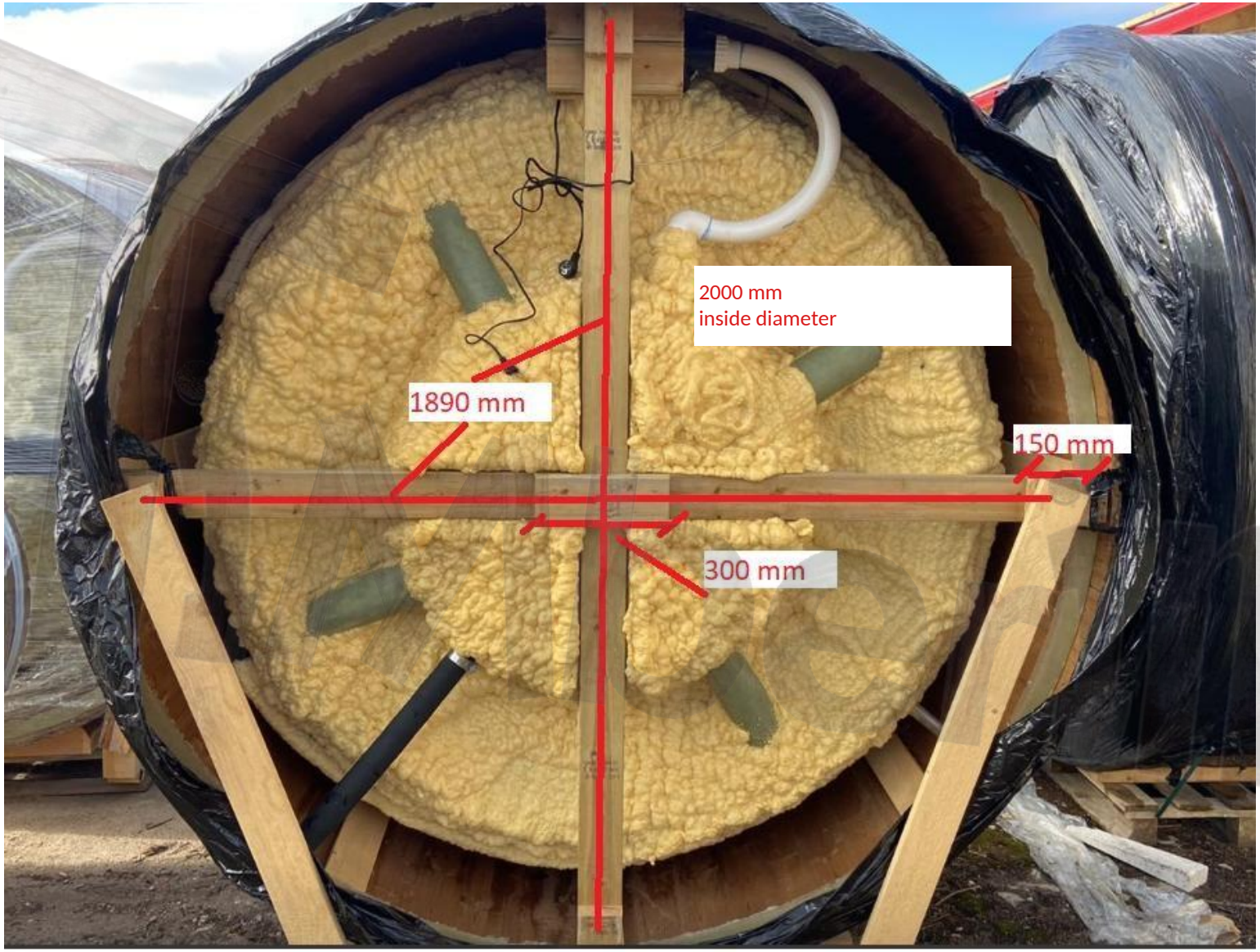

A TYPE STAIRS

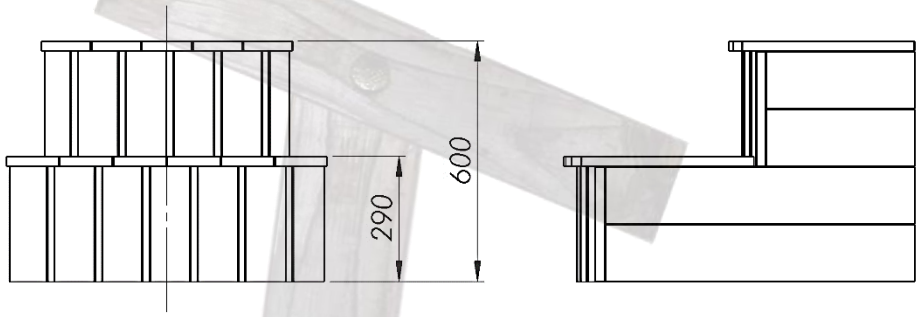

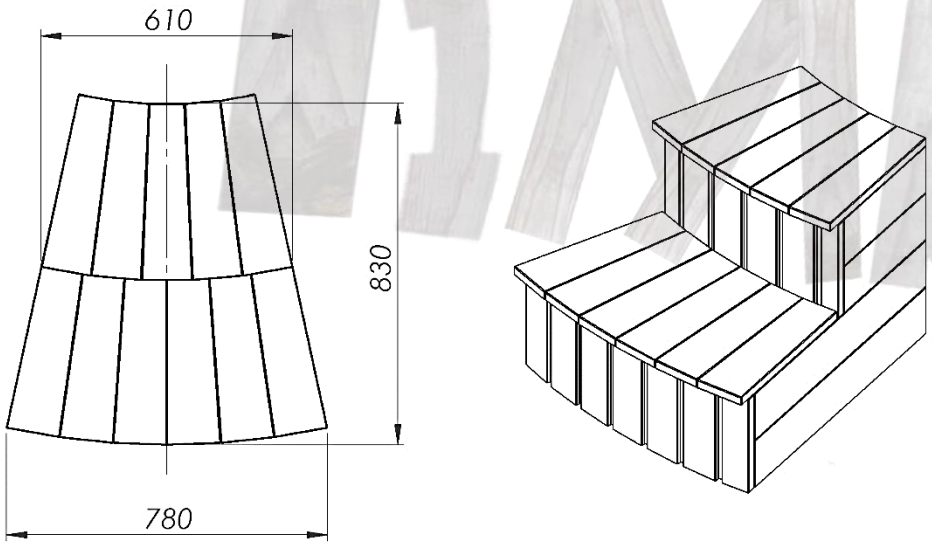

MODEL	STAIRS A TYPE
Height total	600 mm
First step height	290 mm
Width total	780 mm
Length	830 mm
Also offered	C type

timberin

WOODEN LID + WOODEN ROUND EDGE (SILL)

MODEL	WOODEN PARTS
Wooden lid diameter	2300 mm
Wooden sill width	170 mm
Spruce or Thermowood only	

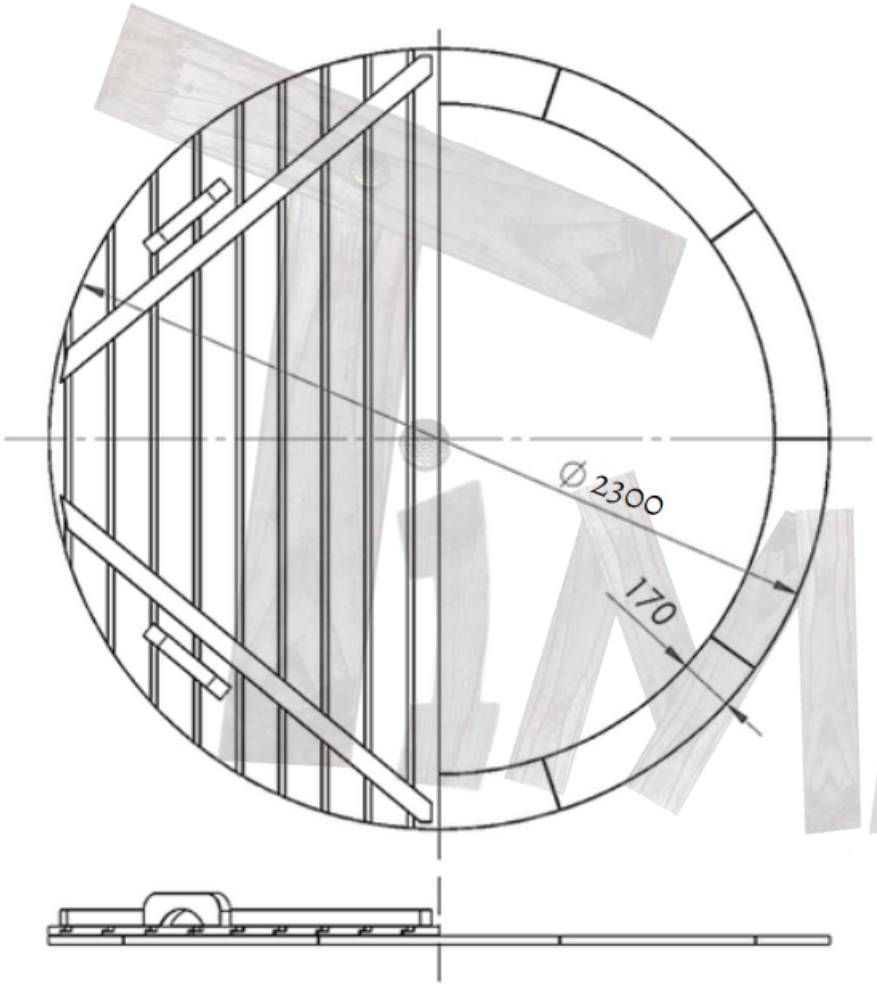

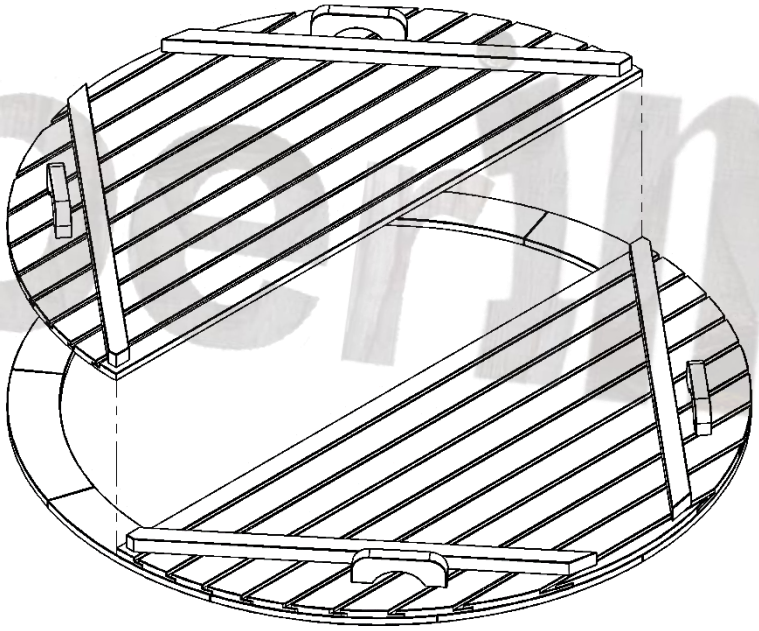

FIBERGLASS LID

MODEL	FIBERGLASS LID
Diameter	2280 mm
Insulation thickness (if chosen)	10 mm

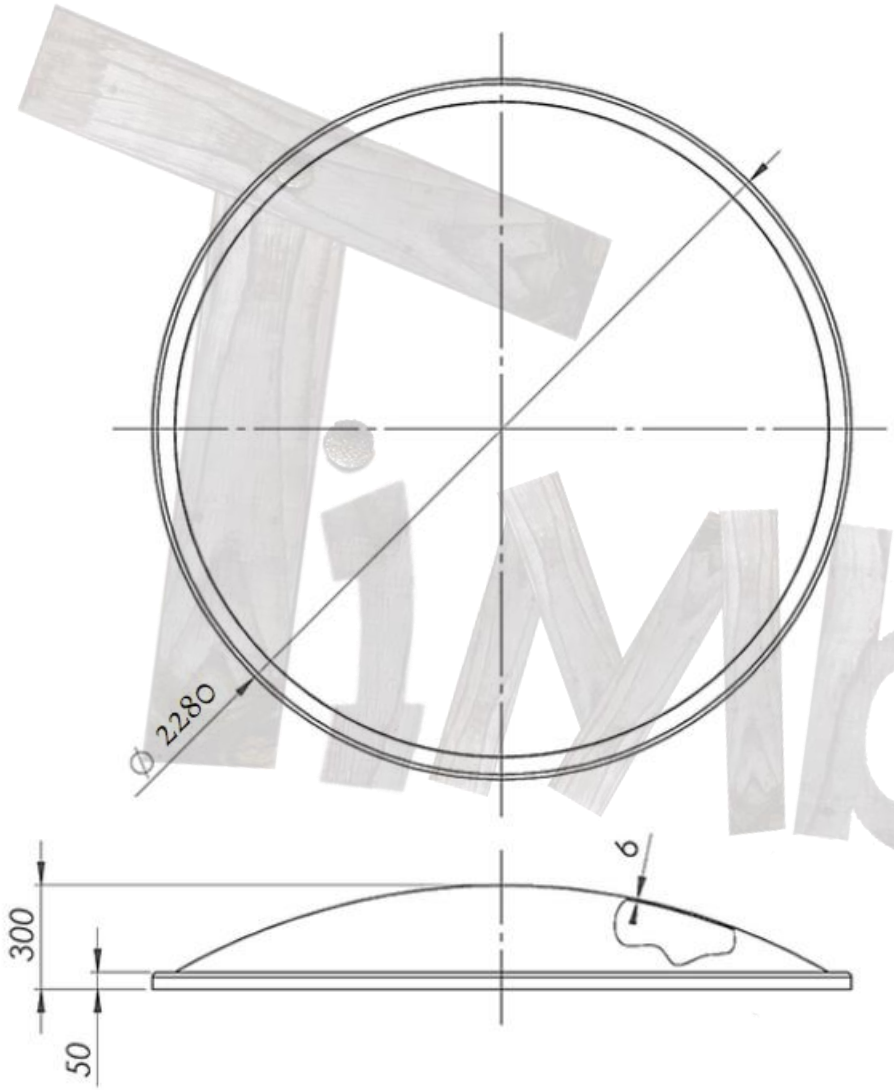



LEATHER LID

MODEL	LEATHER LID
Diameter	2250 mm
Side leather overlay	100 mm
Insulation thickness	70 mm

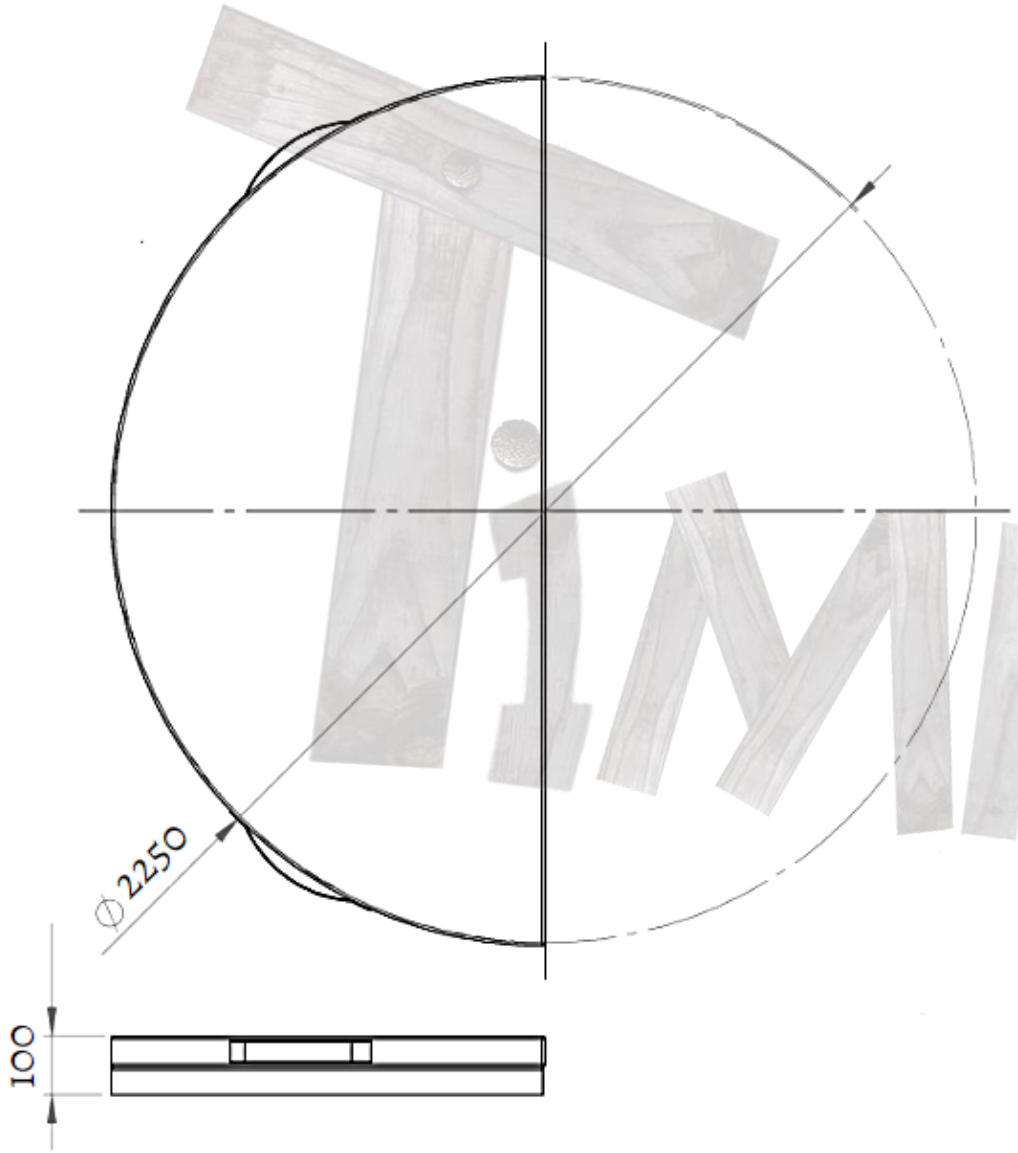

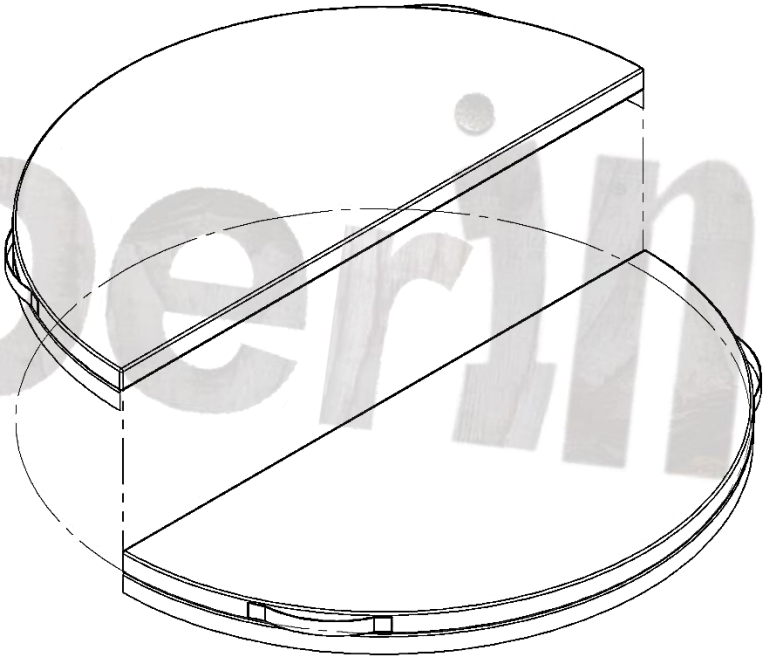

EXTERNAL WATER RELEASE TAP & FILTER CONNECTIONS

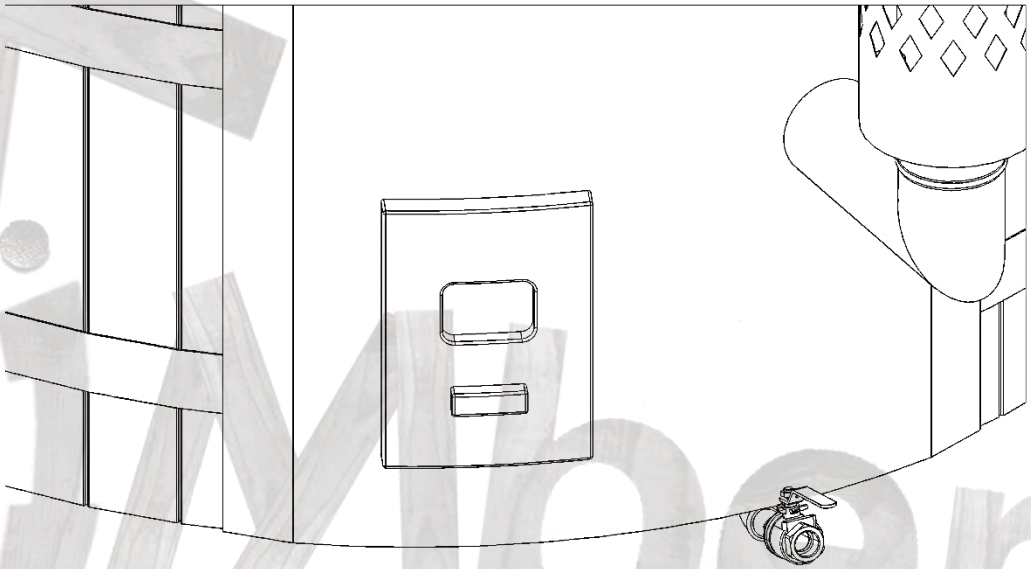

MODEL	CONNECTIONS
Filter connections (AISI 316) installed upon request	1 inch / 25 mm
External water release tap (AISI 316)	1 inch / 25 mm

WOODEN BOXES FOR SPA SYSTEMS STORAGE

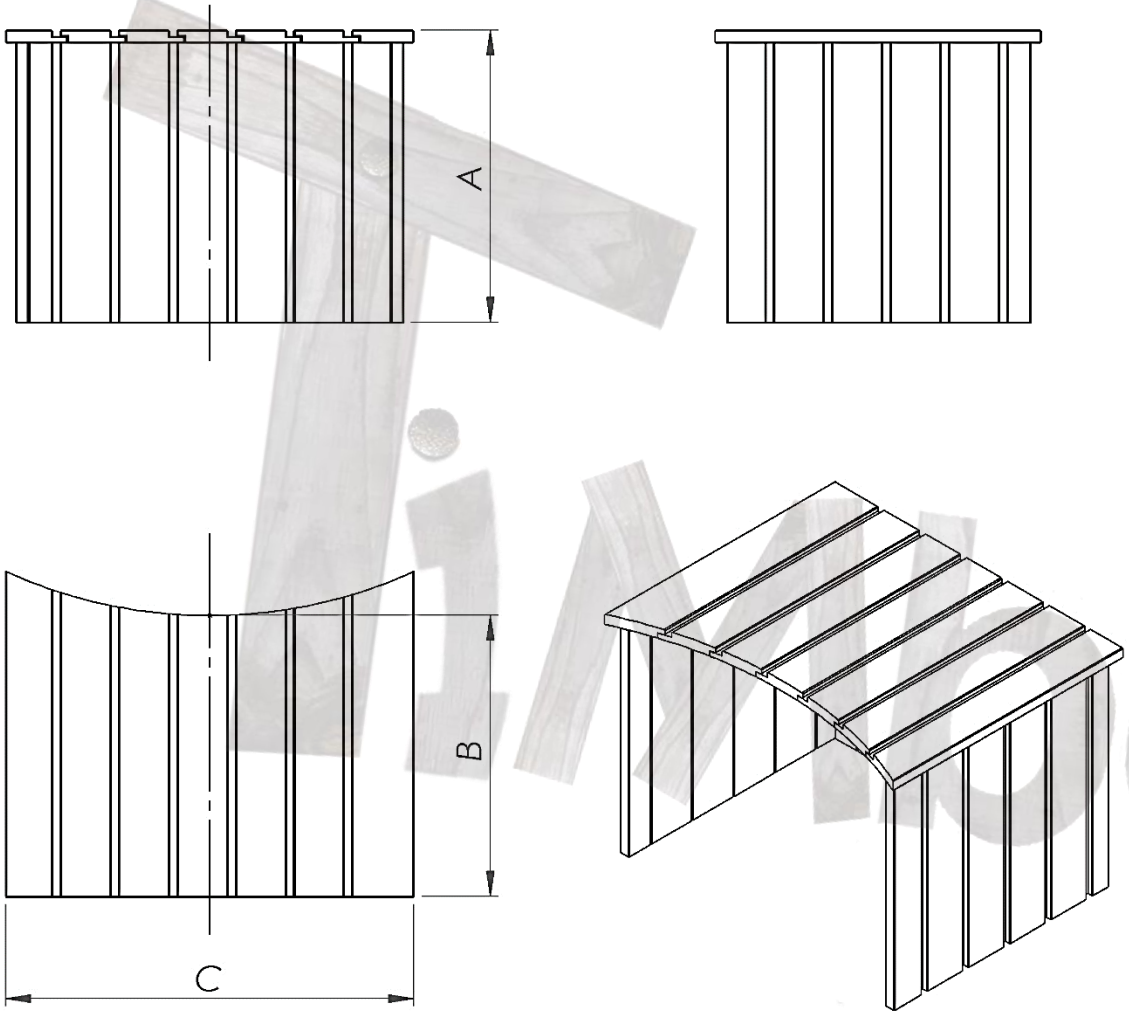

MODEL	WOODEN BOX
Sand filtration with wooden box	A: 800 mm B: 700 mm C: 600 mm
Electric heater with wooden box	A: 400 mm B: 600 mm C: 600 mm
Sand filtration + Electric heater with wooden box	A: 800 mm B: 700 mm C: 600 mm

iModern

NORDIC CORE 2000 DELIVERY INFO

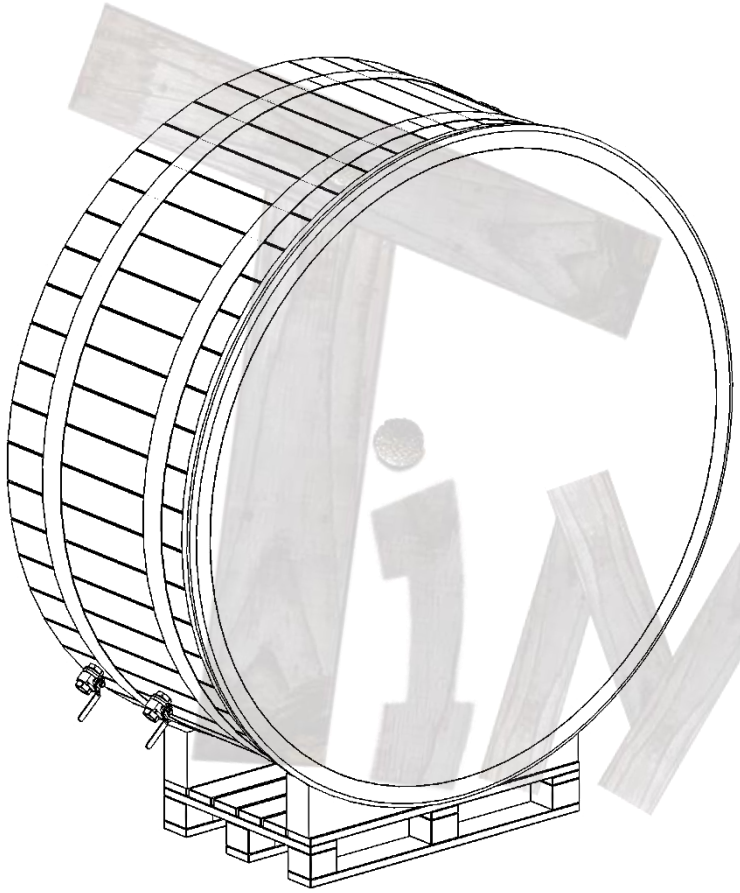

MODEL	CORE DELIVERY
On the pallet packed model measurements:	Height: 2450 mm Width: 1300 mm Length: 2350 mm
Additional side package (stairs)	Height: 900 mm Width: 800 mm Length: 1000 mm

iMberin