TimberIN
BALTIC SPA & SAUNAS

PLEASE NOTE

The measurements in the drawings and on the TimberIN websites are approximate. They will differ slightly from the measurements of the finished product, because our products are individually designed and hand-made. If one or more measurements are very important to you, please tell us before you order. We will pay close attention to your requirements during production, so that the product is made as closely as possible to them.

NORDIC EXTERNAL COMFORT

TECHNICAL SHEET

Table of contents

ø1800 MM EXTERNAL COMFORT

ø2000 MM EXTERNAL COMFORT

⌀1800 MM EXTERNAL COMFORT

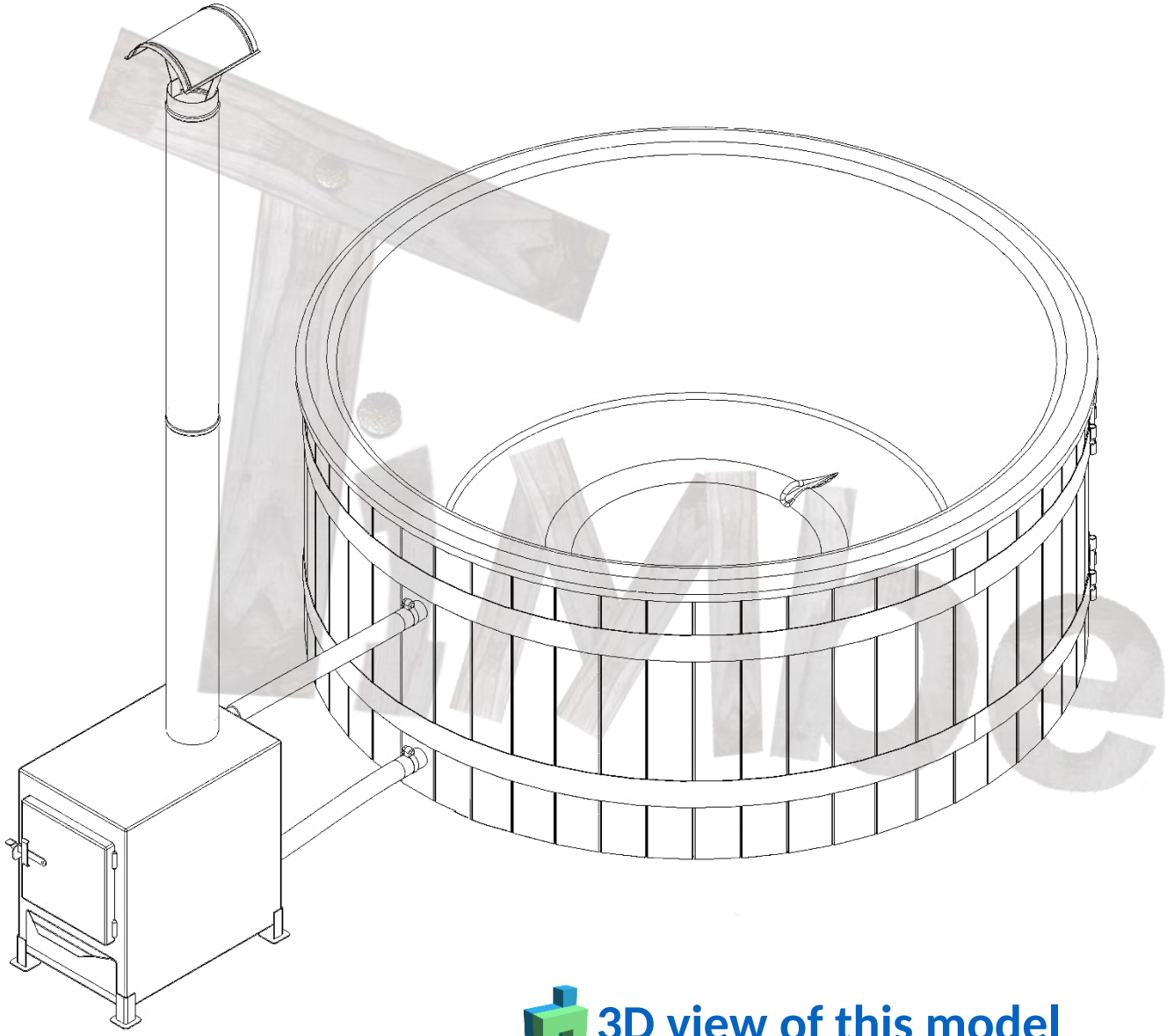

MODEL	NORDIC EXTERNAL
	COMFORT
No. of bathers	4-6
Water capacity	1400 l
LED	optional
HYDRO MASSAGE	optional
AIR MASSAGE	optional
SAND FILTRATION	optional
INSULATION	included
ACRYLIC SHELL	optional
STAIRS	A or C
FIBERGLASS LID	optional
LEATHER LID	optional
WOODEN LID + EDGE	optional
HEATING OPTIONS	CLADDING
External wood stove	Spruce
Electric heater	Larch
Hybrid: electric + wood	Thermowood
Hybrid: heat pump + wood	Oak
External pellet stove	WPC black
Gas heater	WPC brown
Bioheater	
Connections only	

3D view of this model

ACRYLIC SHELL FOR THE EXTERNAL STOVE – Ø 2.0 M

Nordic External Comfort™ 1800 (4–6 persons)

TimberIN
BALTIC SPA & SAUNAS

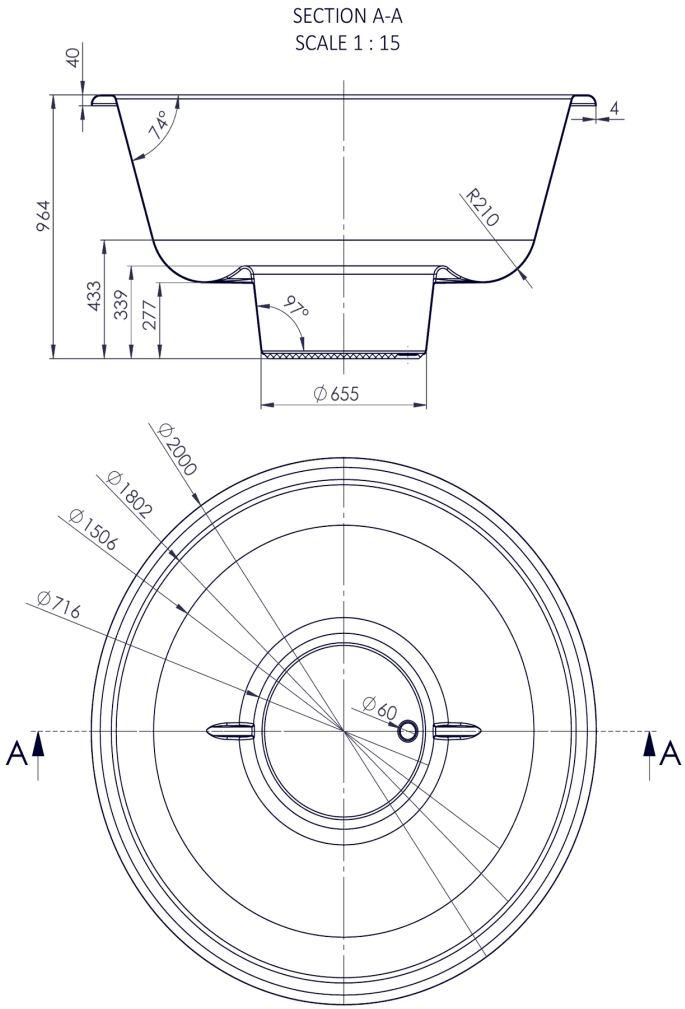

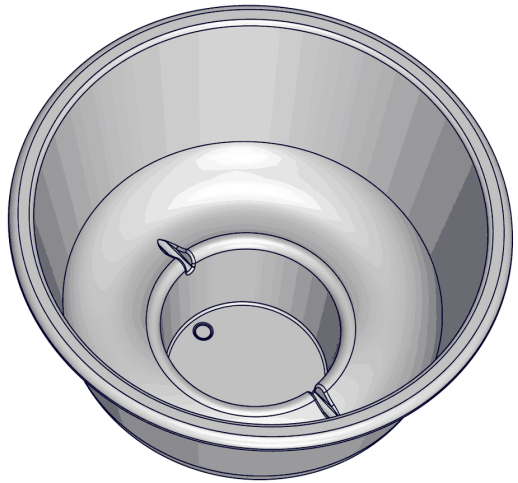

TimberIN Nordic External Comfort™

Acrylic shell for the external stove – Ø 2.0 m
The acrylic shell replaces the fibreglass shell.
Dimensions in mm · drawing not to scale when printed
www.timberin.com

ACRYLIC SHELL COLOURS

Nordic External Comfort™

For the acrylic shell only (the fibreglass shell has its own colours). White Pearl is preselected; no colour costs extra.

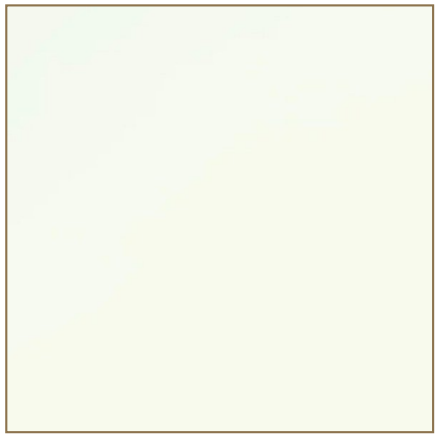

White Pearl
(preselected)



Grey Metal



Coffee Clouds



Pearl Black Clouds

Colours on screen and in print may differ slightly from the real surface.

www.timberin.com

GENERAL INFO

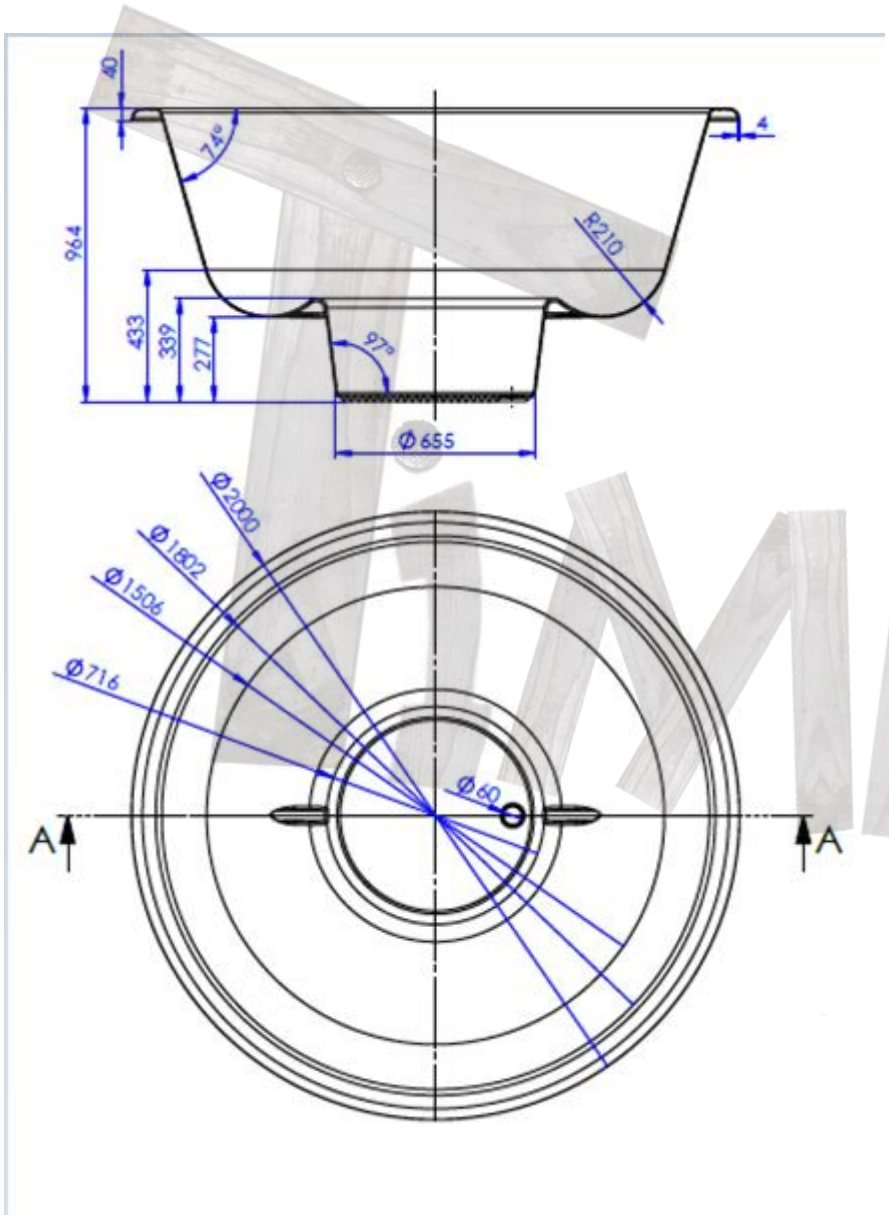

MODEL	EXTERNAL COMFORT NO CHILD SEAT
Inside diameter	1802 mm
Outside diameter	2000 mm
Chimney length	2000 mm

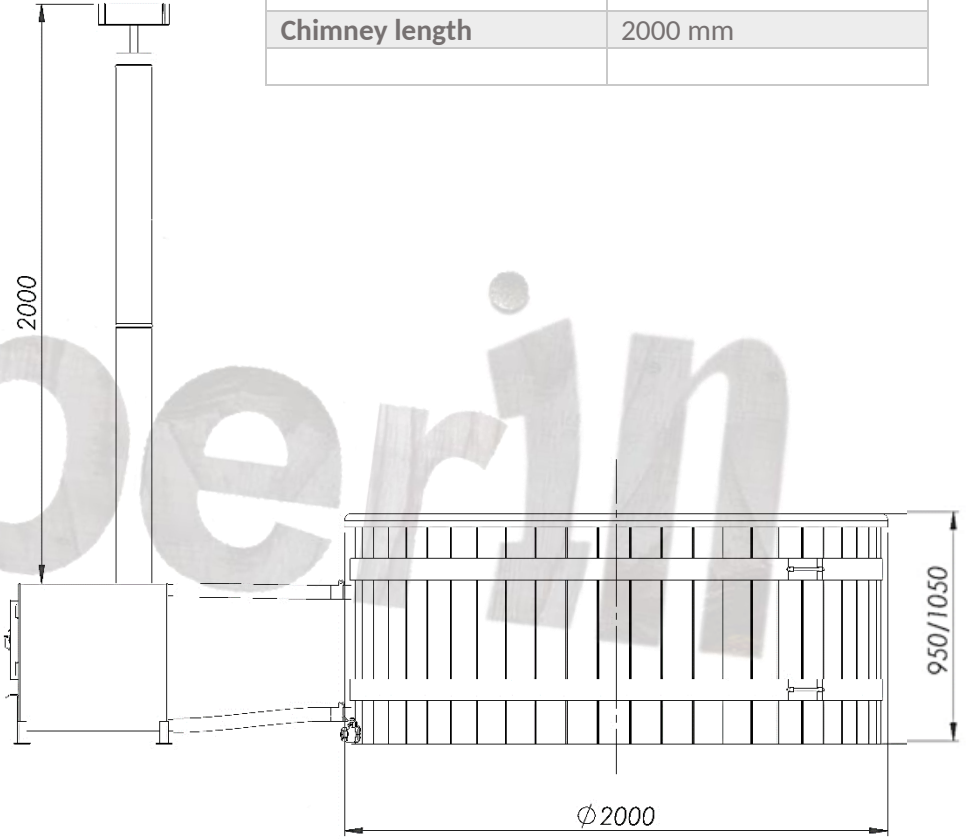

Imberin

EXTERNAL WOOD BURNER

BFTS-50, 22kW

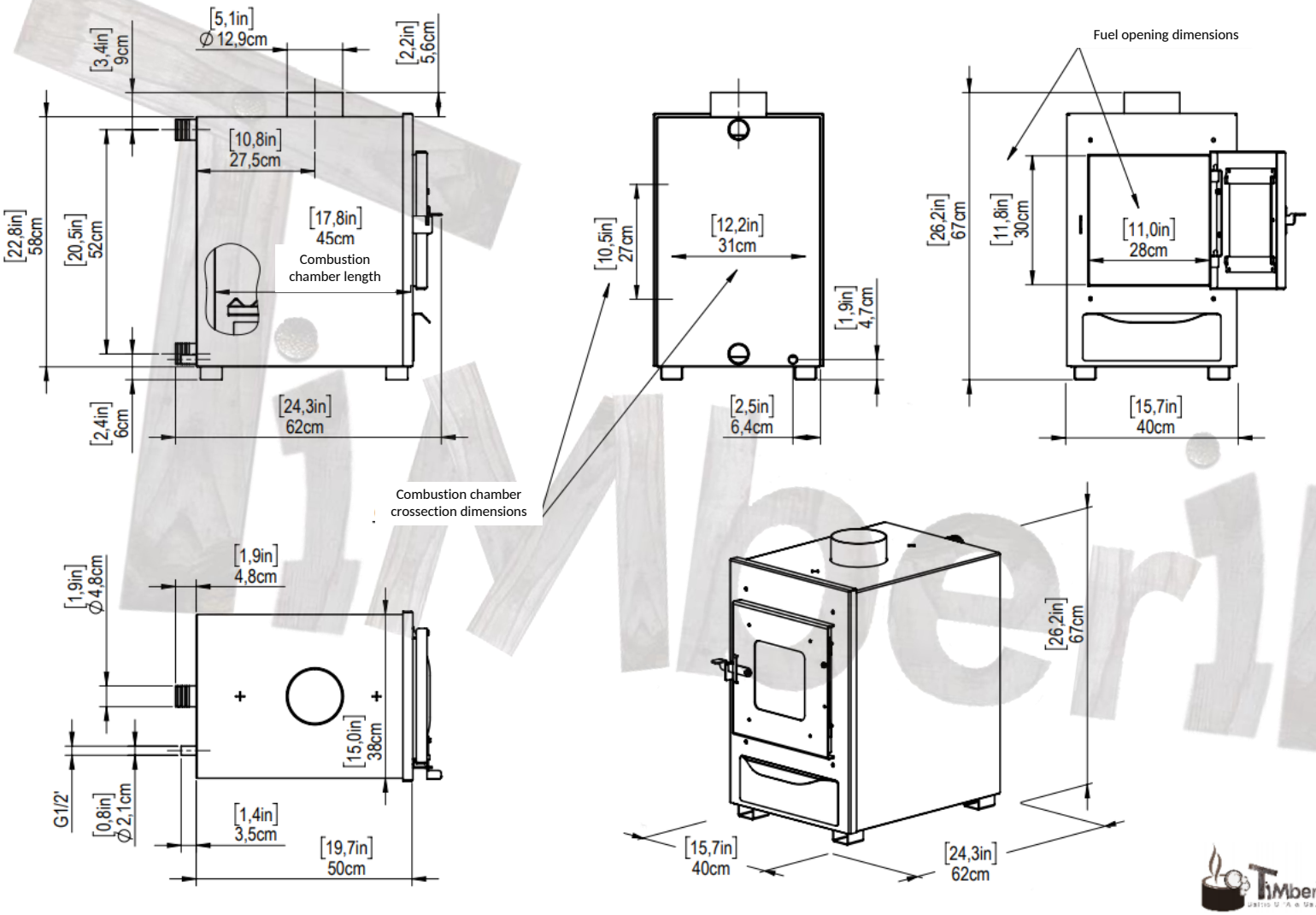

inAberin

WITH ELECTRIC HEATER

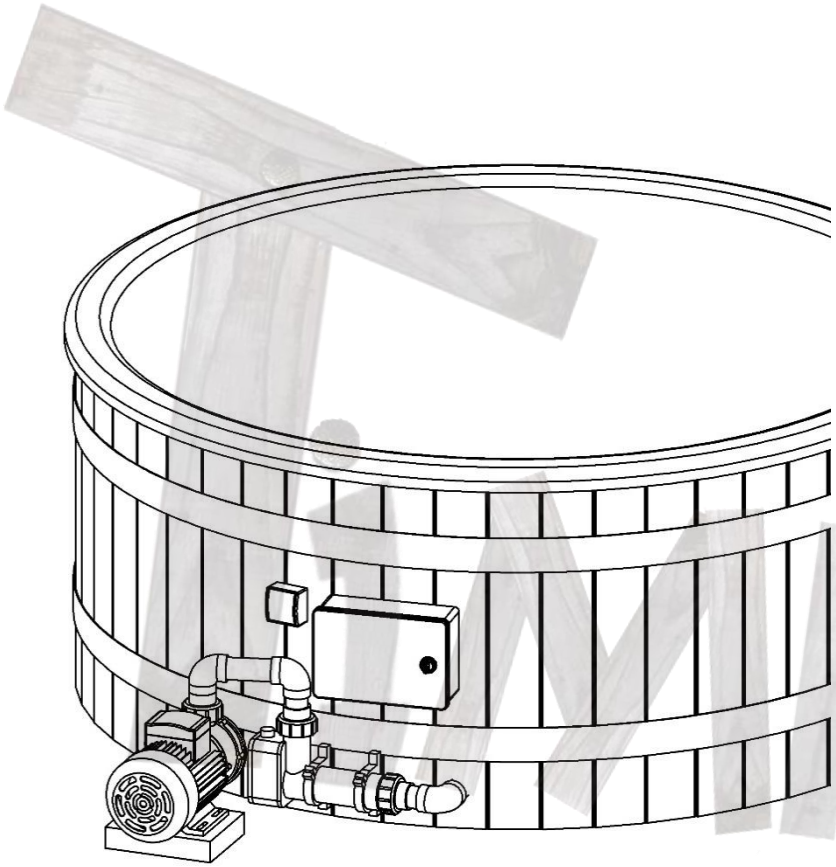

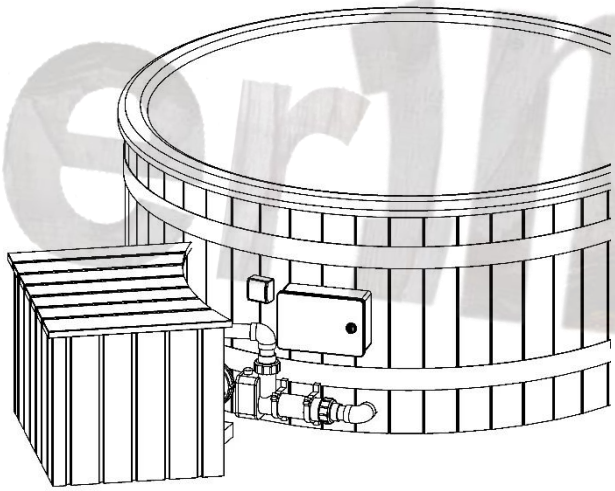

A TYPE STAIRS

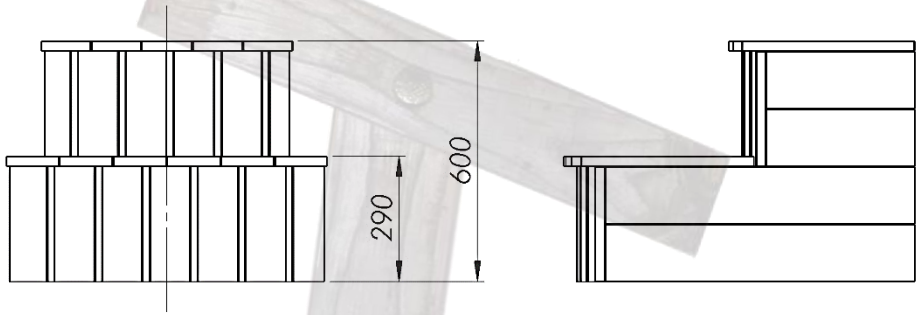

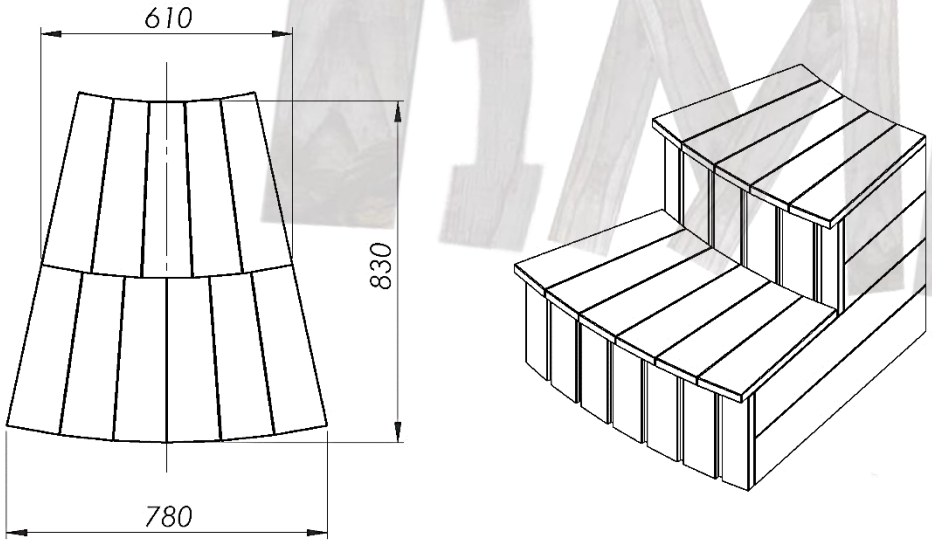

MODEL	STAIRS A TYPE
Height total	600 mm
First step height	290 mm
Width total	780 mm
Length	830 mm
Also offered	C type

iMberin

WOODEN LID + WOODEN ROUND EDGE (SILL)

MODEL	WOODEN PARTS
Wooden lid diameter	2100 mm
Wooden lid insulation (if chosen)	30 mm
Wooden sill width	170 mm
Spruce or Thermowood only	

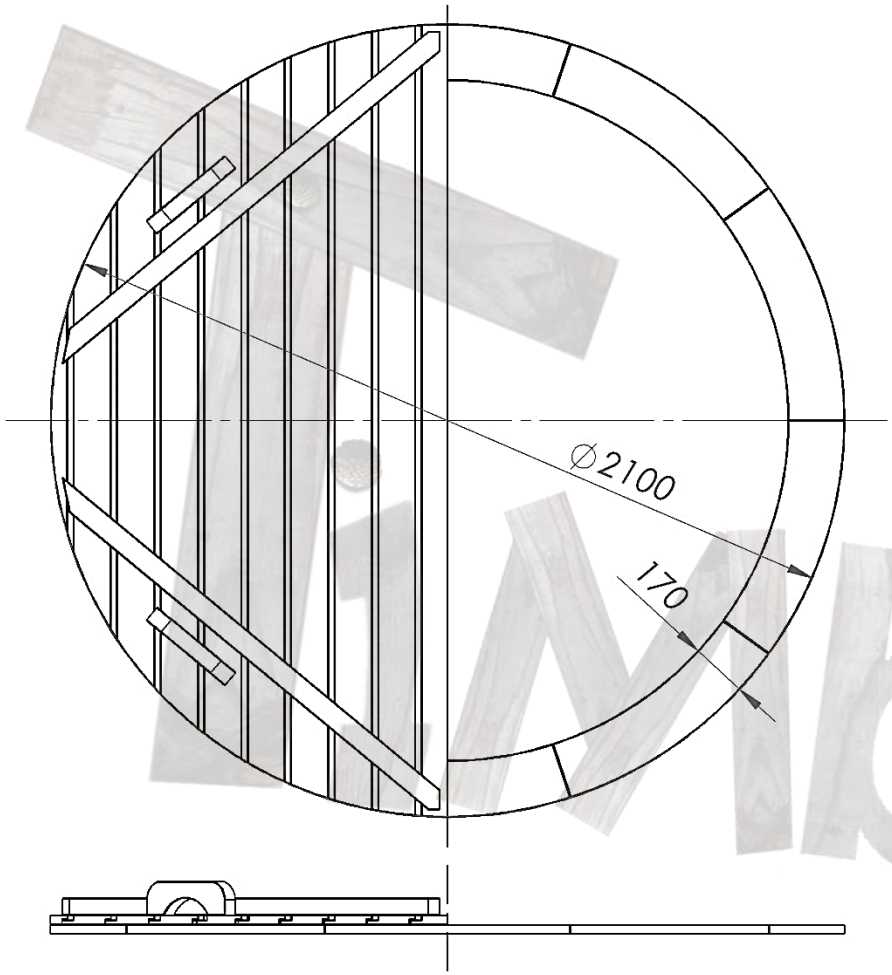

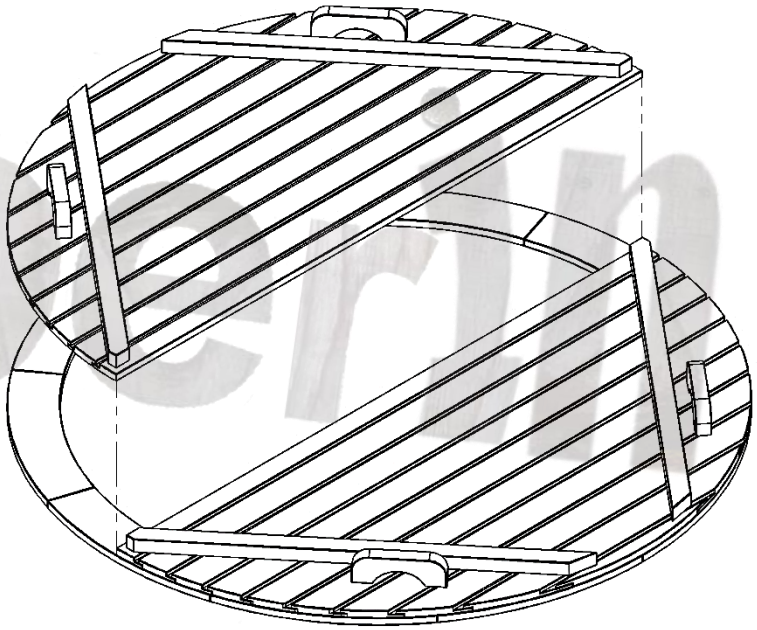

TMberth

FIBERGLASS LID

MODEL	FIBERGLASS LID
Diameter	2030 mm
Insulation thickness (if chosen)	10 mm





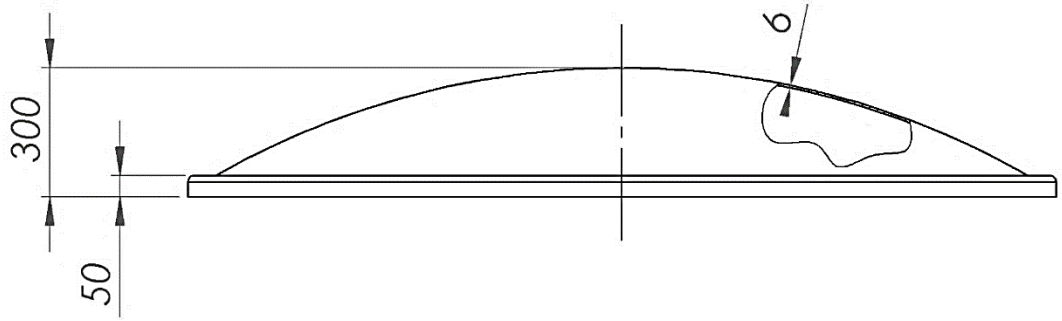

LEATHER LID

MODEL	LEATHER LID
Diameter	2000 mm
Side leather overlay	150 mm
Insulation thickness	70 mm

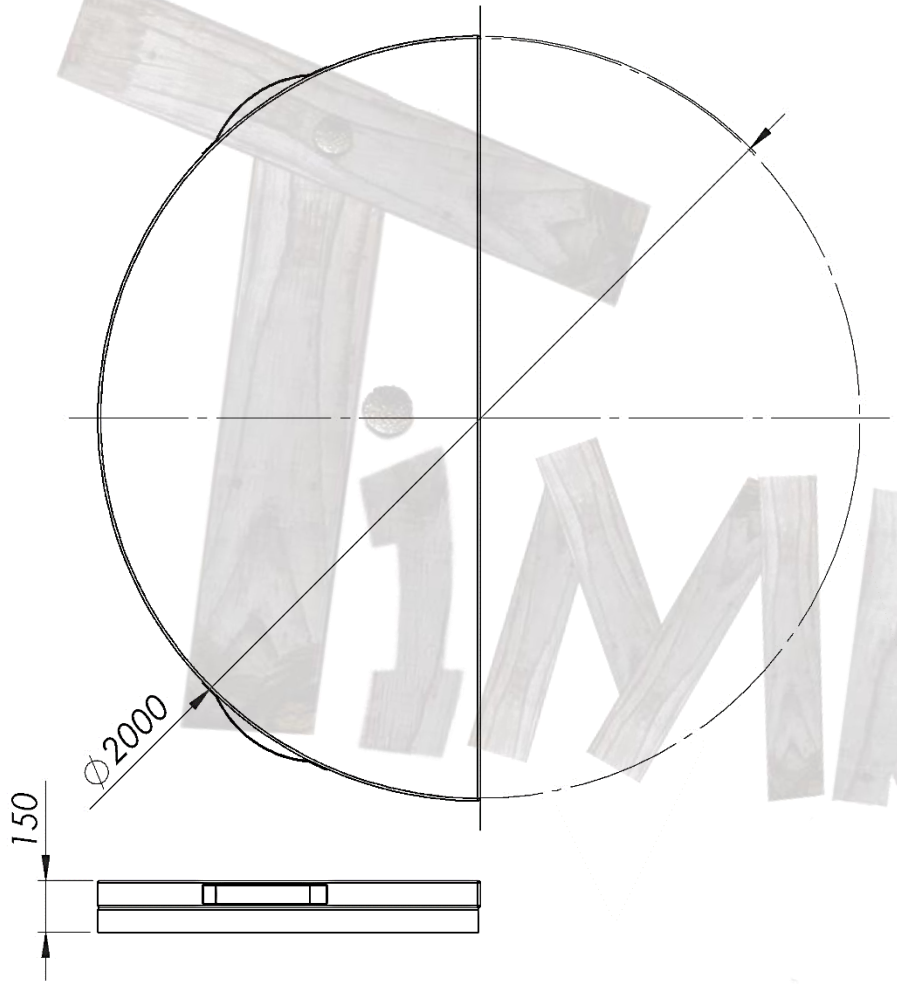

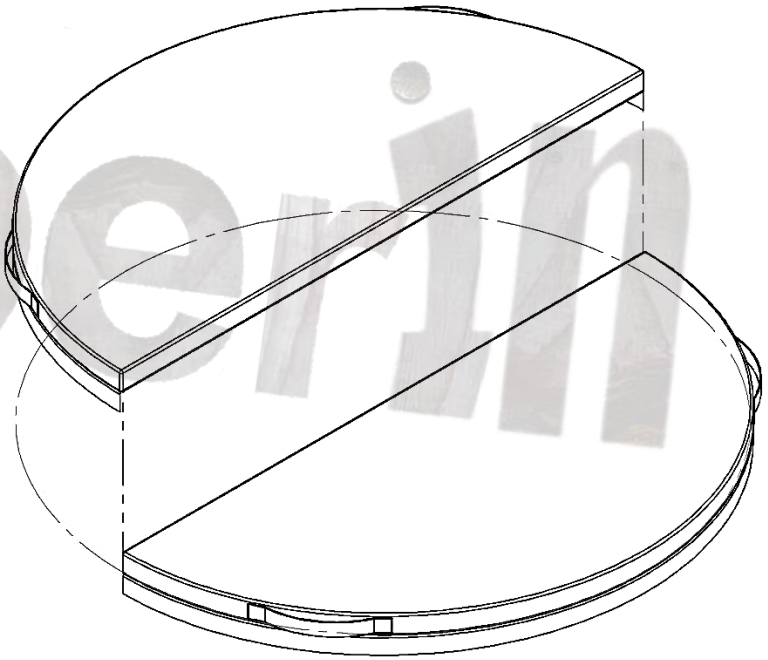

timberin

WATER RELEASE

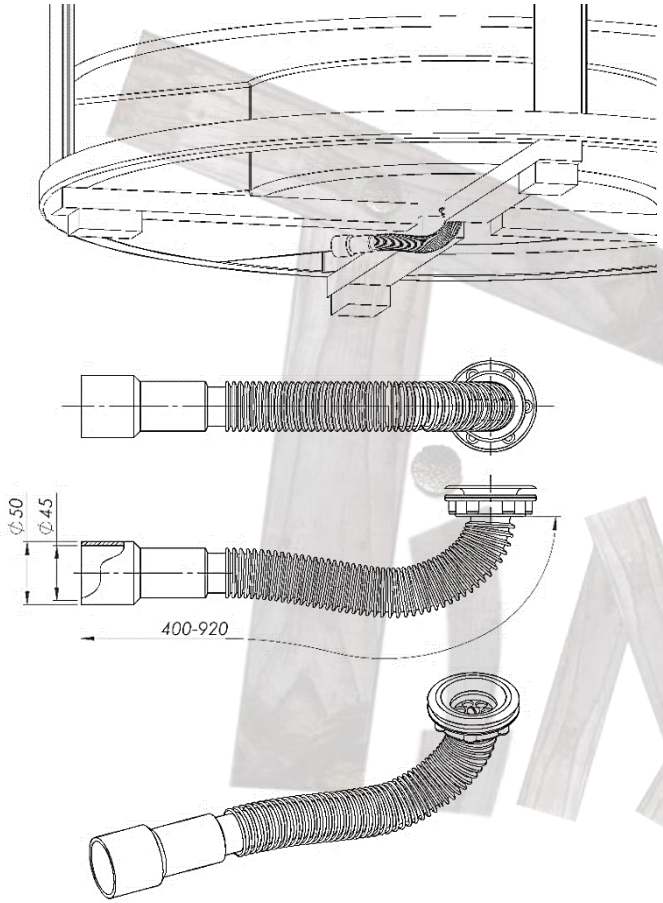

MODEL	WATER DRAIN
Water drain length	400-920 mm
Water drain inside diameter	45 mm
Water drain outside diameter	50 mm
Material	PVC

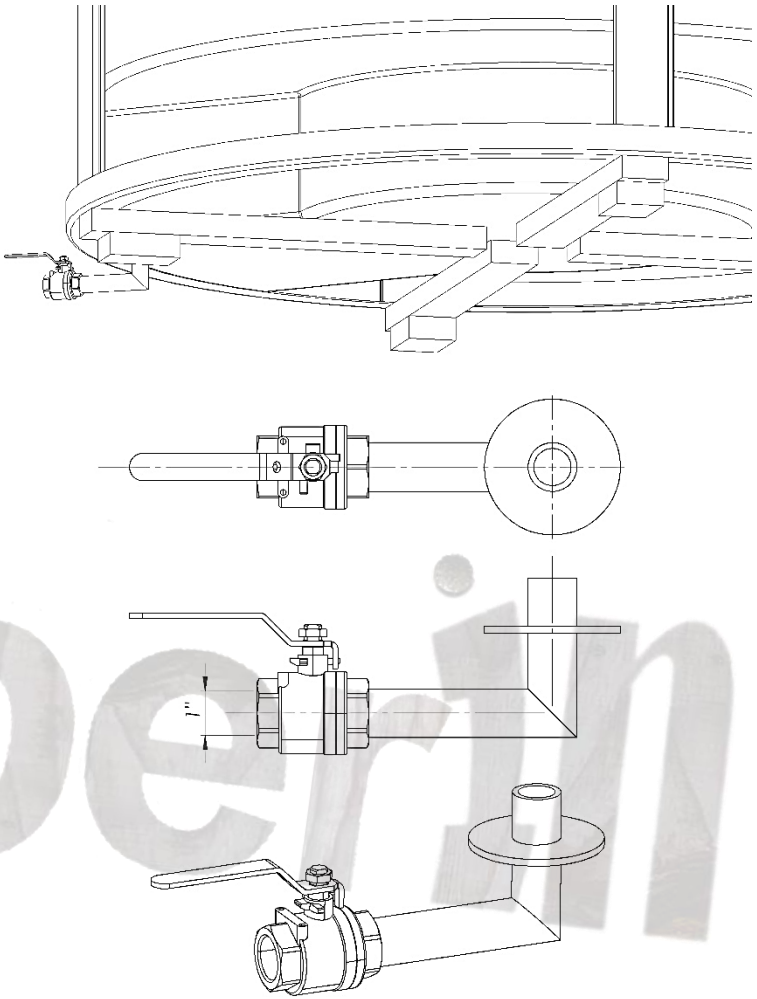

MODEL	EXTERNAL WATER TAP
External tap diameter	1 inch
Material	316 type of stainless steel

timberin

WOODEN BOXES FOR SPA SYSTEMS STORAGE

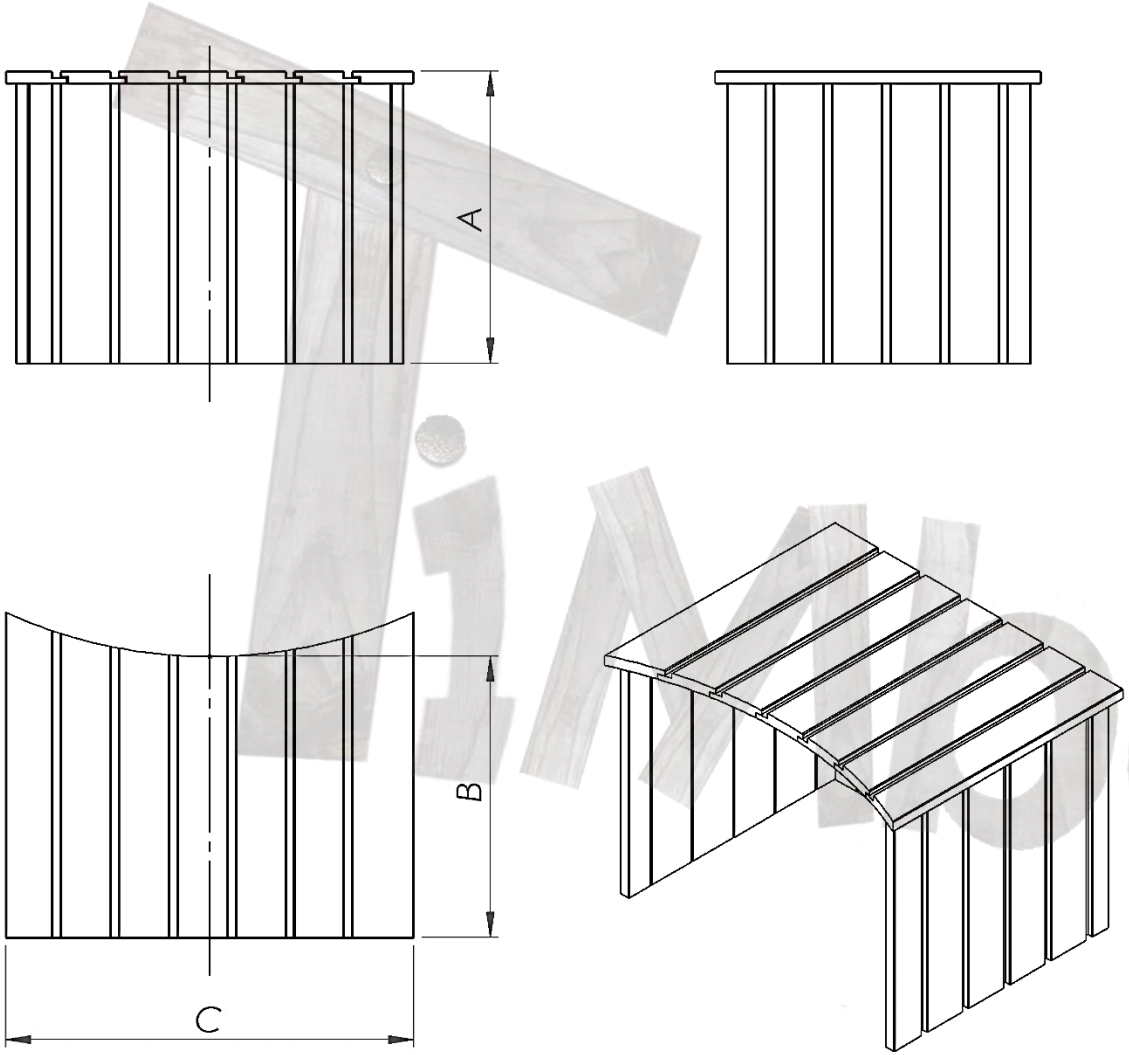

MODEL	WOODEN BOX
Sand filtration with wooden box	A: 800 mm B: 700 mm C: 600 mm
Electric heater with wooden box	A: 400 mm B: 600 mm C: 600 mm
Sand filtration + Electric heater with wooden box	A: 800 mm B: 700 mm C: 600 mm
Gas heater with wooden box	A: 940 mm B: 350 mm C: 500 mm

iMoerin

EXTERNAL COMFORT 1800 DELIVERY INFO

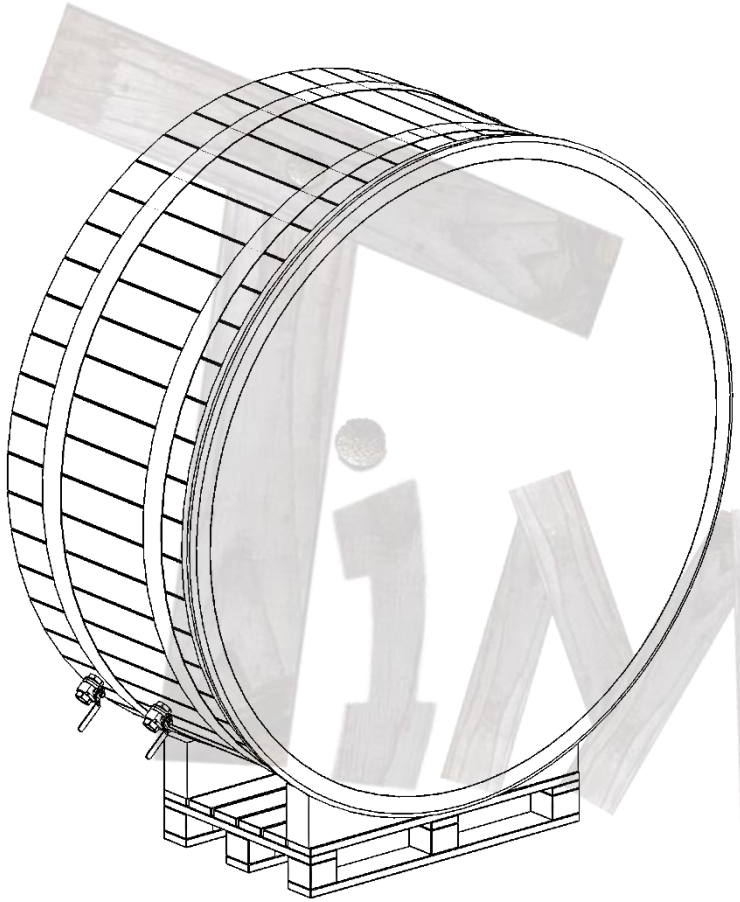

MODEL	DELIVERY
On the pallet packed model measurements:	Height: 2200 mm Width: 1300 mm Length: 2100 mm
Additional side package (stairs and heater)	Height: 900 mm Width: 800 mm Length: 1000 mm

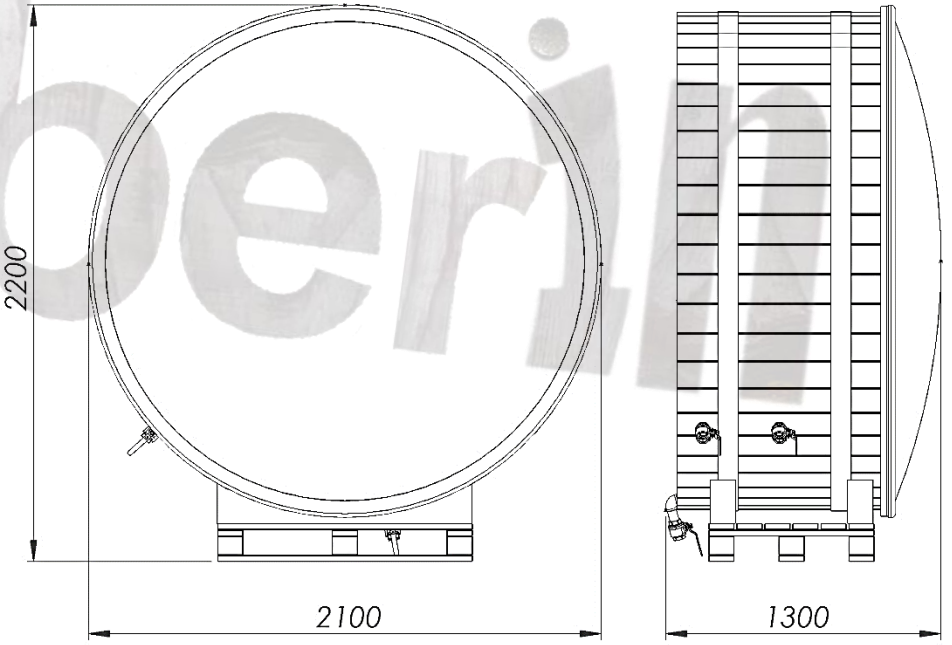

iMperial

⌀2000 MM EXTERNAL COMFORT

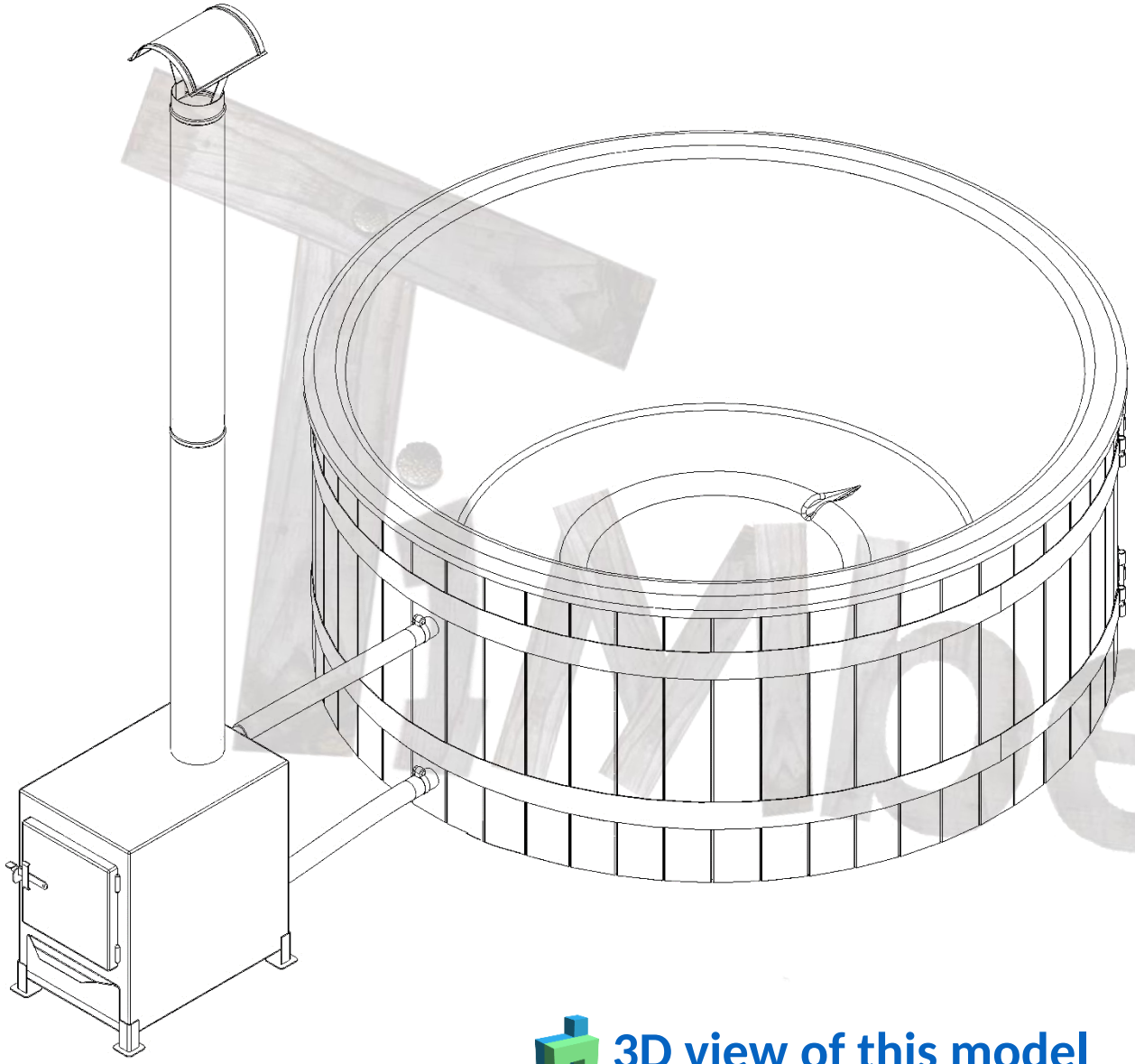

MODEL	NORDIC EXTERNAL
	COMFORT
No. of bathers	6-8
Water capacity	1550 l
LED	optional
HYDRO MASSAGE	optional
AIR MASSAGE	optional
SAND FILTRATION	optional
INSULATION	included
ACRYLIC SHELL	optional
STAIRS	A or C
FIBERGLASS LID	optional
LEATHER LID	optional
WOODEN LID + EDGE	optional
HEATING OPTIONS	CLADDING
External wood stove	Spruce
Electric heater	Larch
Hybrid: electric + wood	Thermowood
Hybrid: heat pump + wood	Oak
External pellet stove	WPC black
Gas heater	WPC brown
Bioheater	
Connections only	

3D view of this model

ACRYLIC SHELL FOR THE EXTERNAL STOVE – Ø 2.2 M

Nordic External Comfort™ 2000 (6–8 persons)

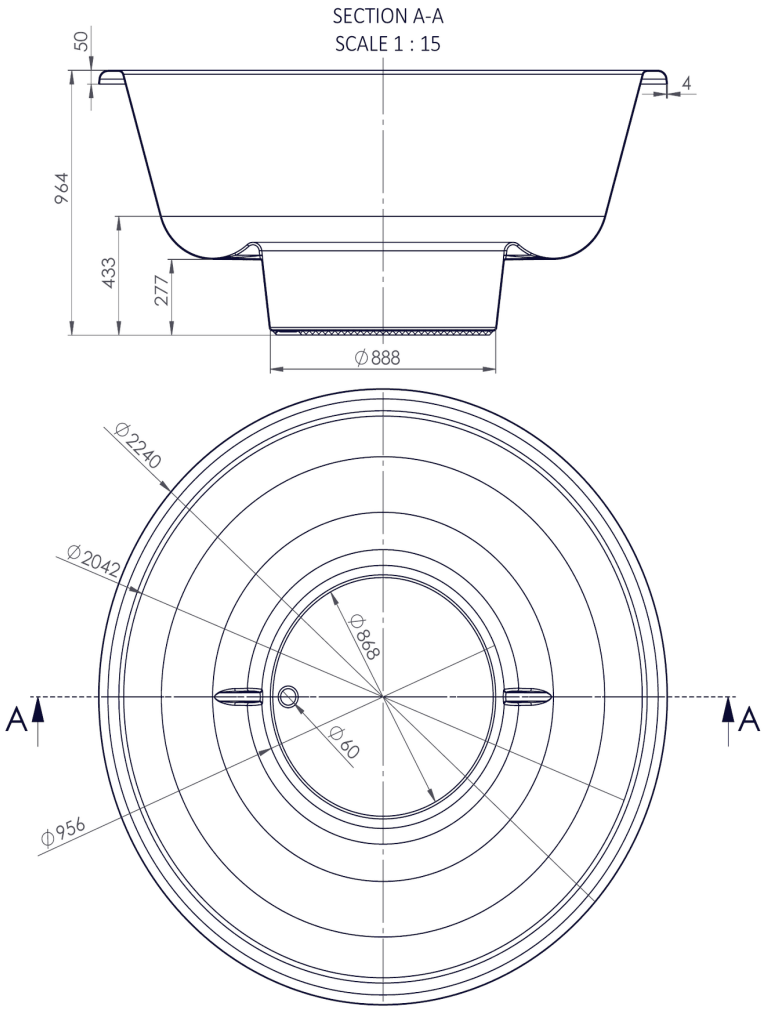



TimberIN Nordic External Comfort™

Acrylic shell for the external stove – Ø 2.2 m
The acrylic shell replaces the fibreglass shell.
Dimensions in mm · drawing not to scale when printed
www.timberin.com

GENERAL INFO

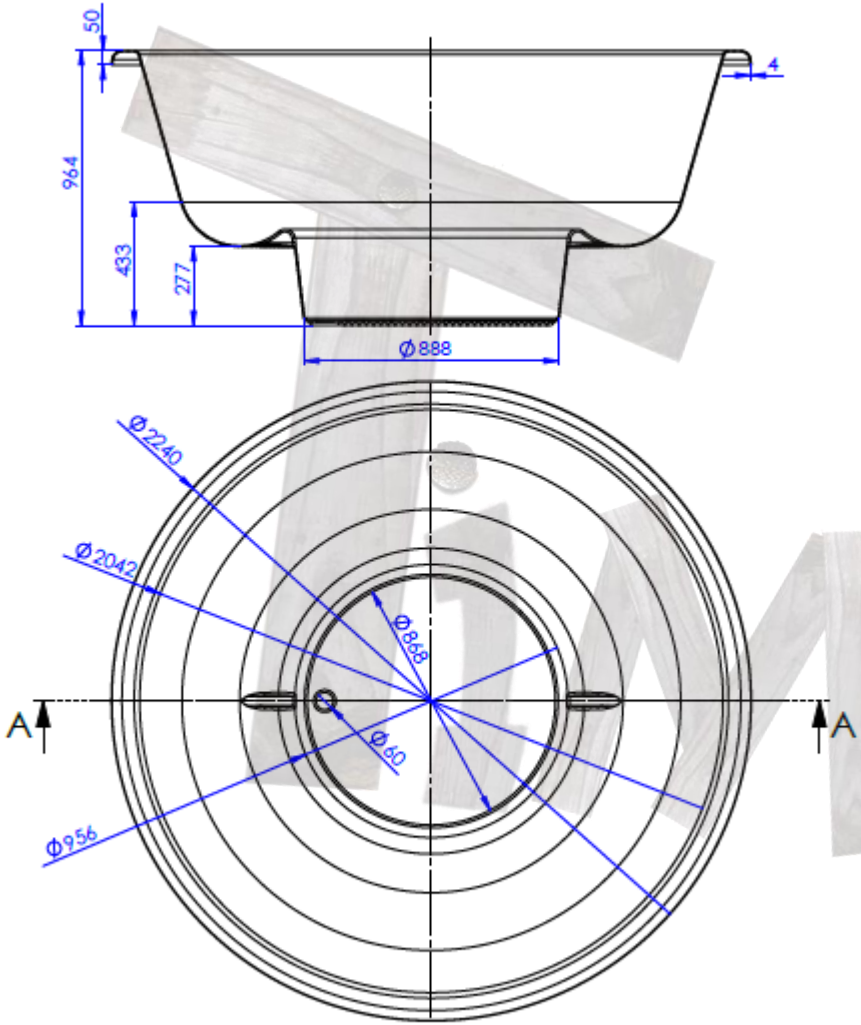

MODEL	EXTERNAL COMFORT NO CHILD SEAT
Inside diameter	2042 mm
Outside diameter	2240 mm
Chimney length	2000 mm

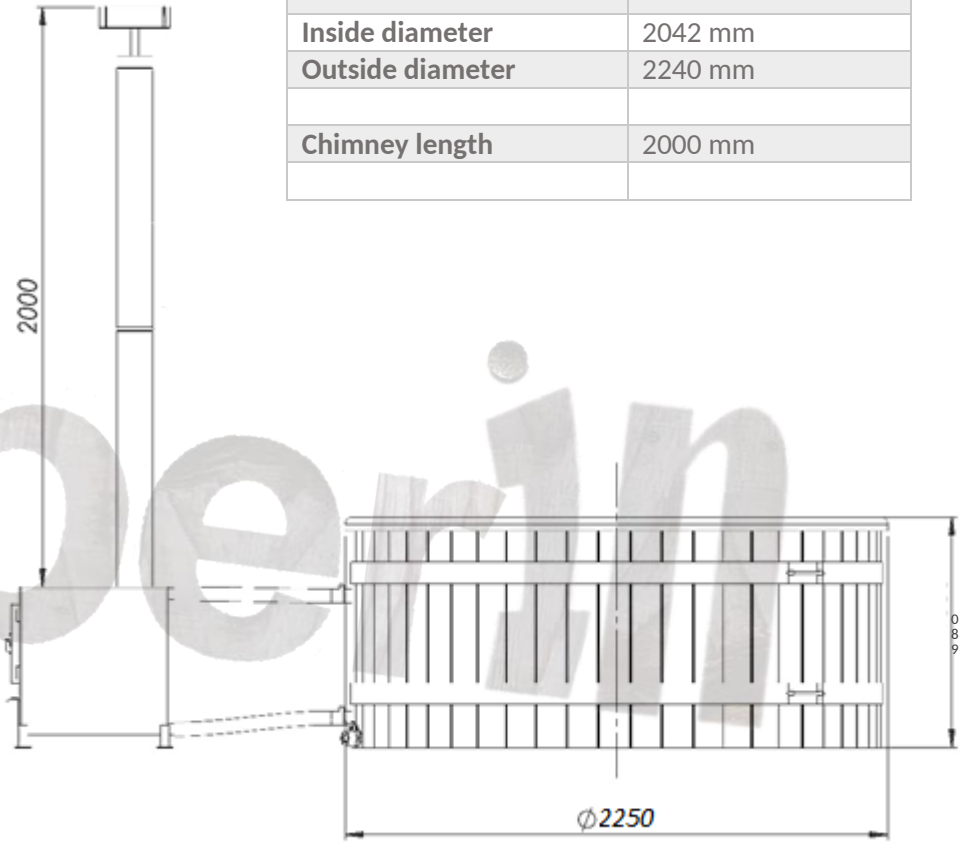

EXTERNAL WOOD BURNER

BFTS-50, 22kW

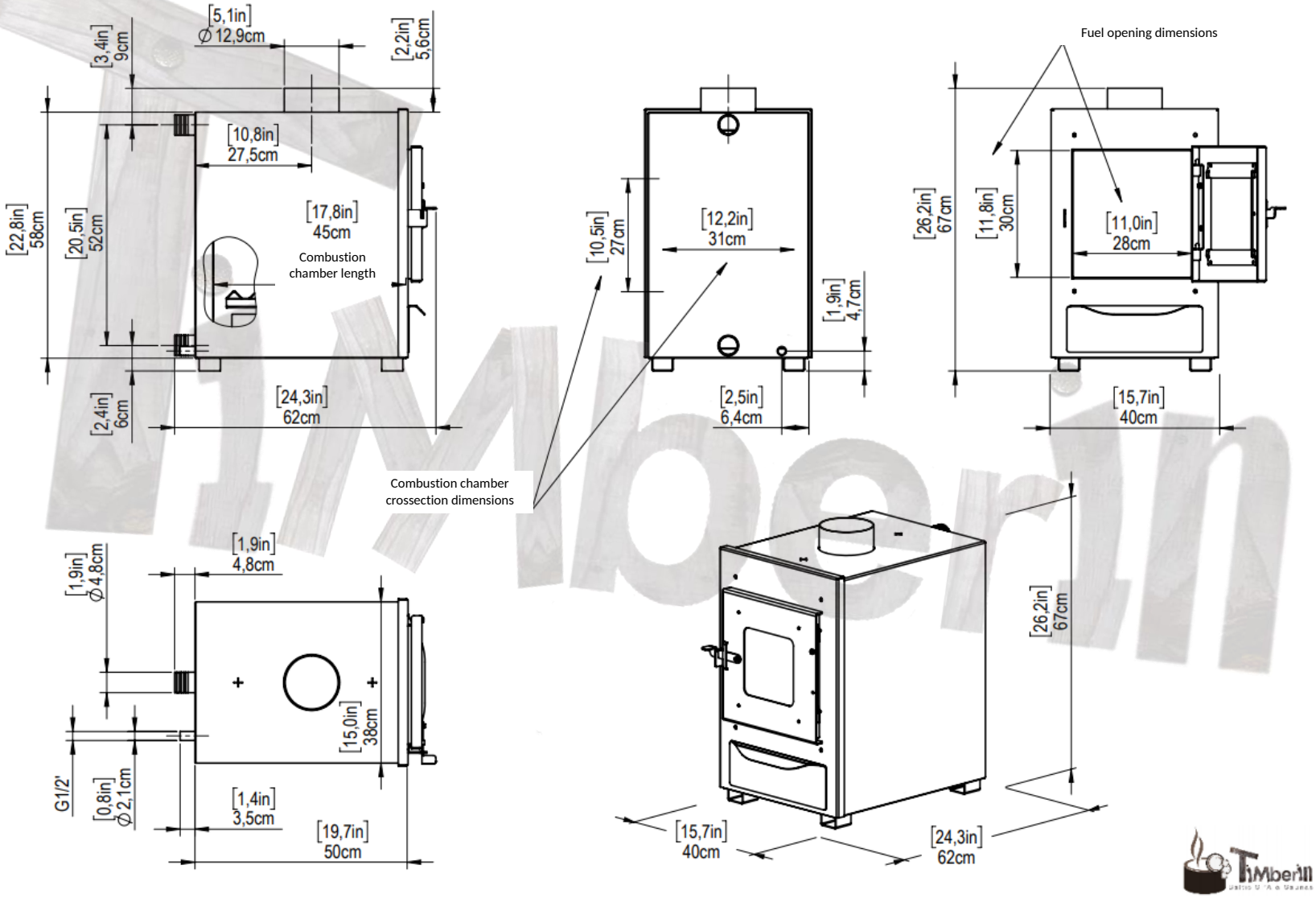

WITH ELECTRIC HEATER

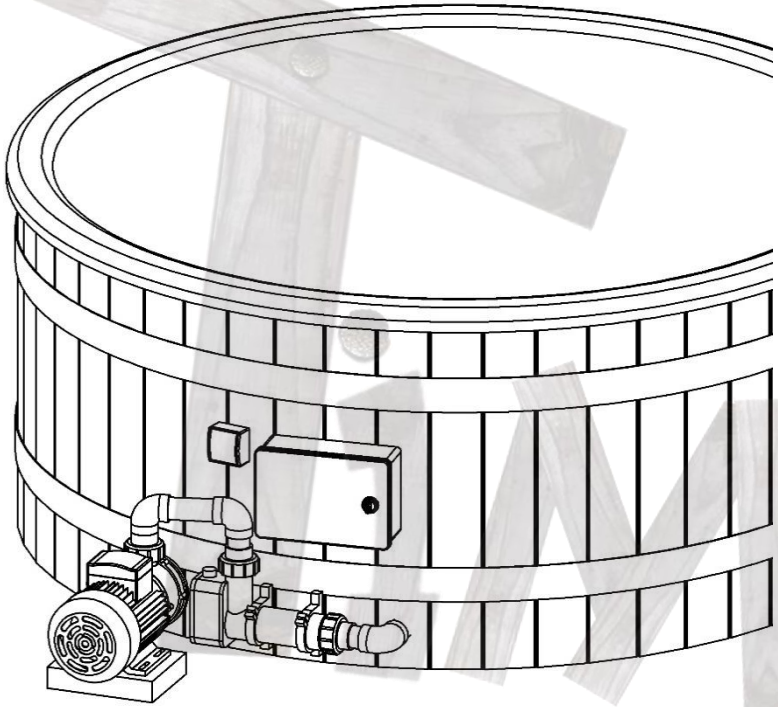

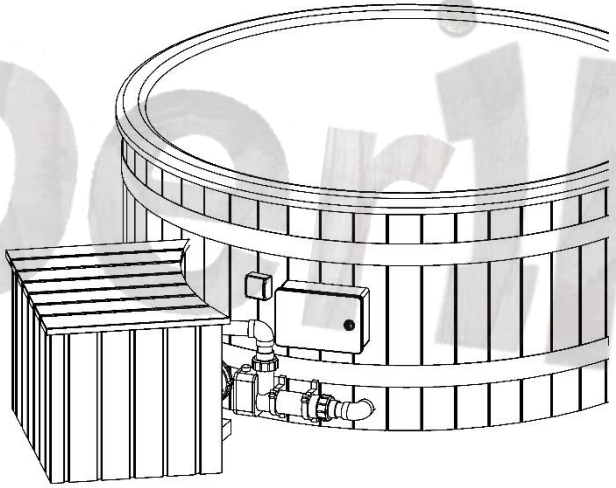

A TYPE STAIRS

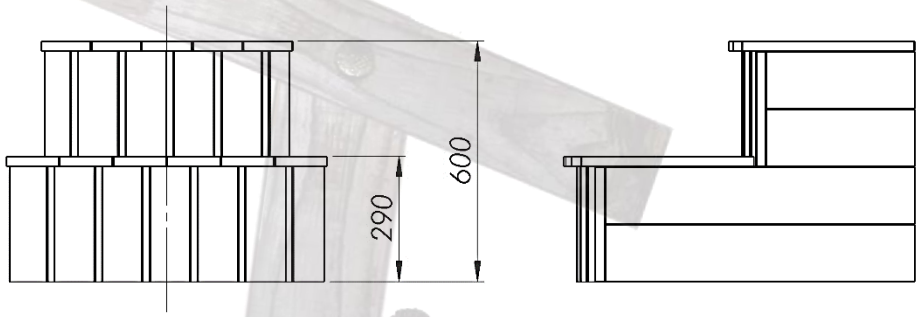

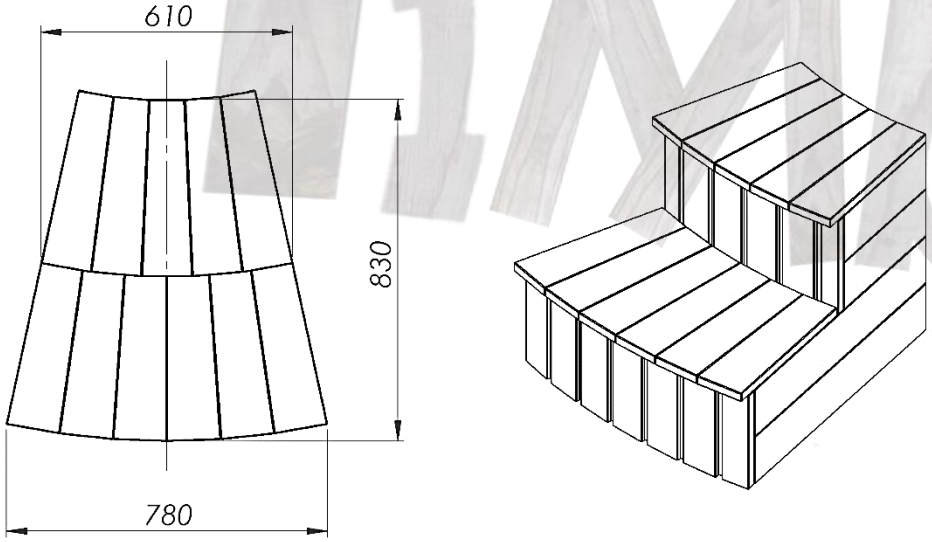

MODEL	STAIRS A TYPE
Height total	600 mm
First step height	290 mm
Width total	780 mm
Length	830 mm
Also offered	C type

iMberin

WOODEN LID + WOODEN ROUND EDGE (SILL)

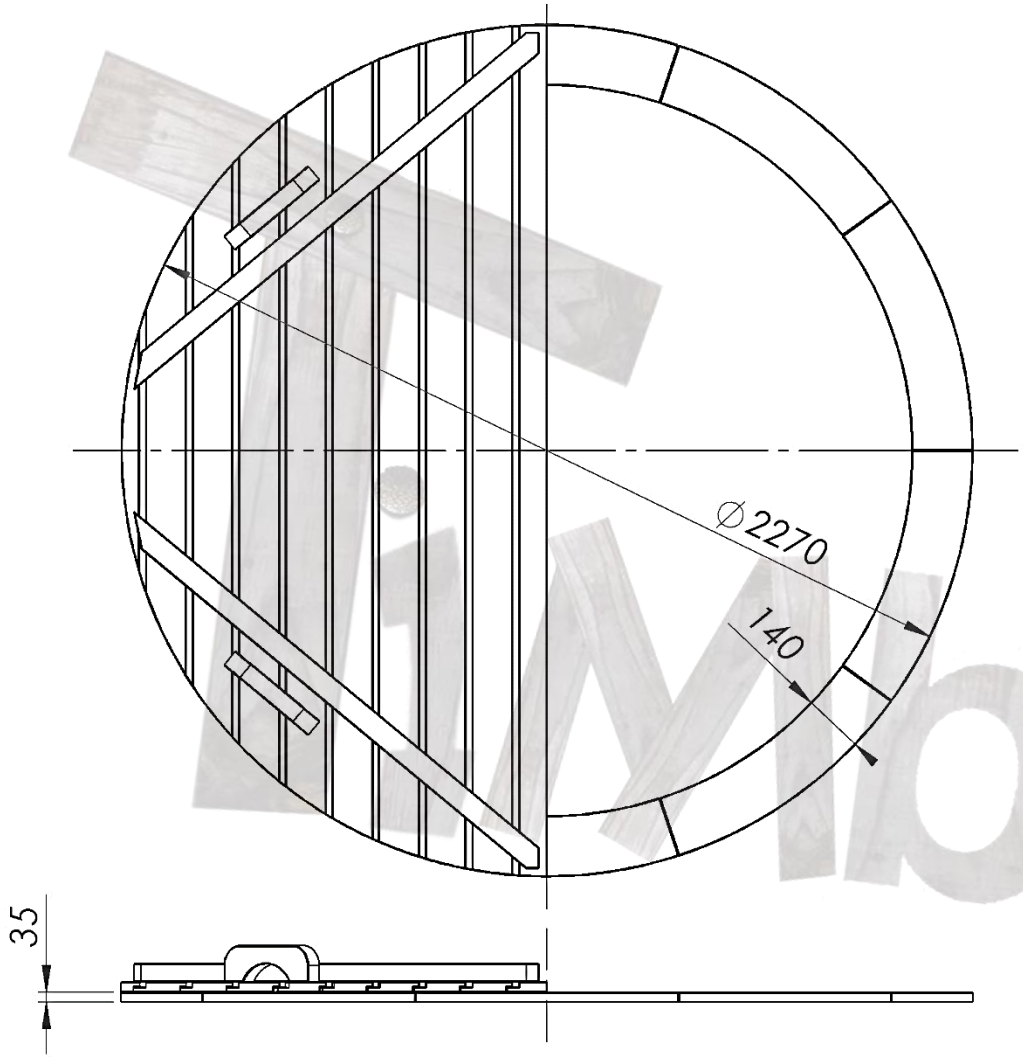

MODEL	WOODEN PARTS
Wooden lid diameter	2270 mm
Wooden lid insulation (if chosen)	30 mm
Wooden sill width	140 mm
Spruce or Thermowood only	
Fiberglass lid	Also offered
Insulated leather lid	Also offered

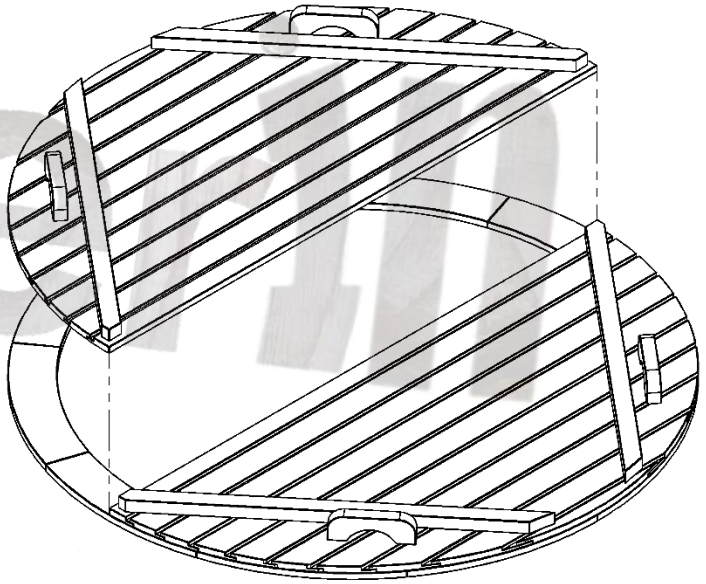

WATER RELEASE

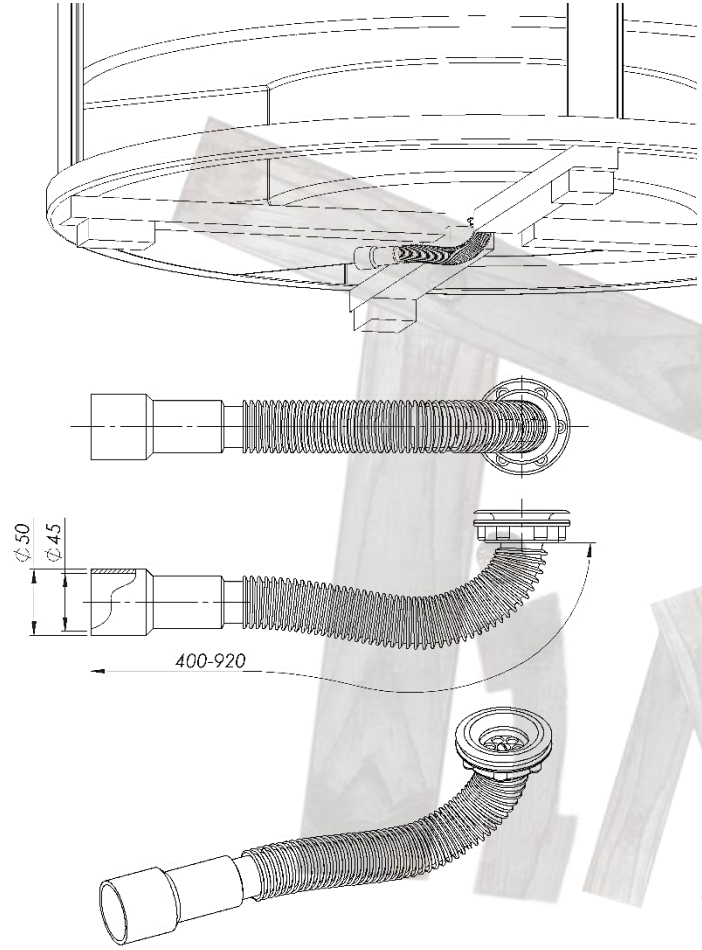

MODEL	WATER DRAIN
Water drain length	400-920 mm
Water drain inside diameter	45 mm
Water drain outside diameter	50 mm
Material	PVC

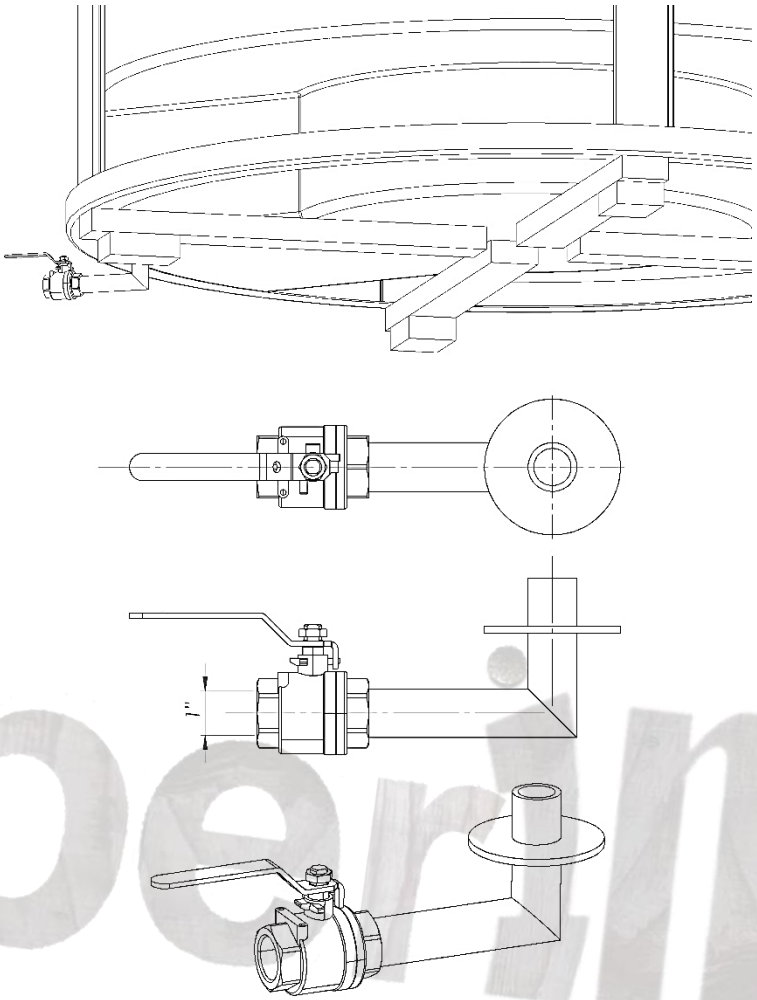

MODEL	EXTERNAL WATER TAP
External tap diameter	1 inch
Material	316 type of stainless steel

Mberin

WOODEN BOXES FOR SPA SYSTEMS STORAGE

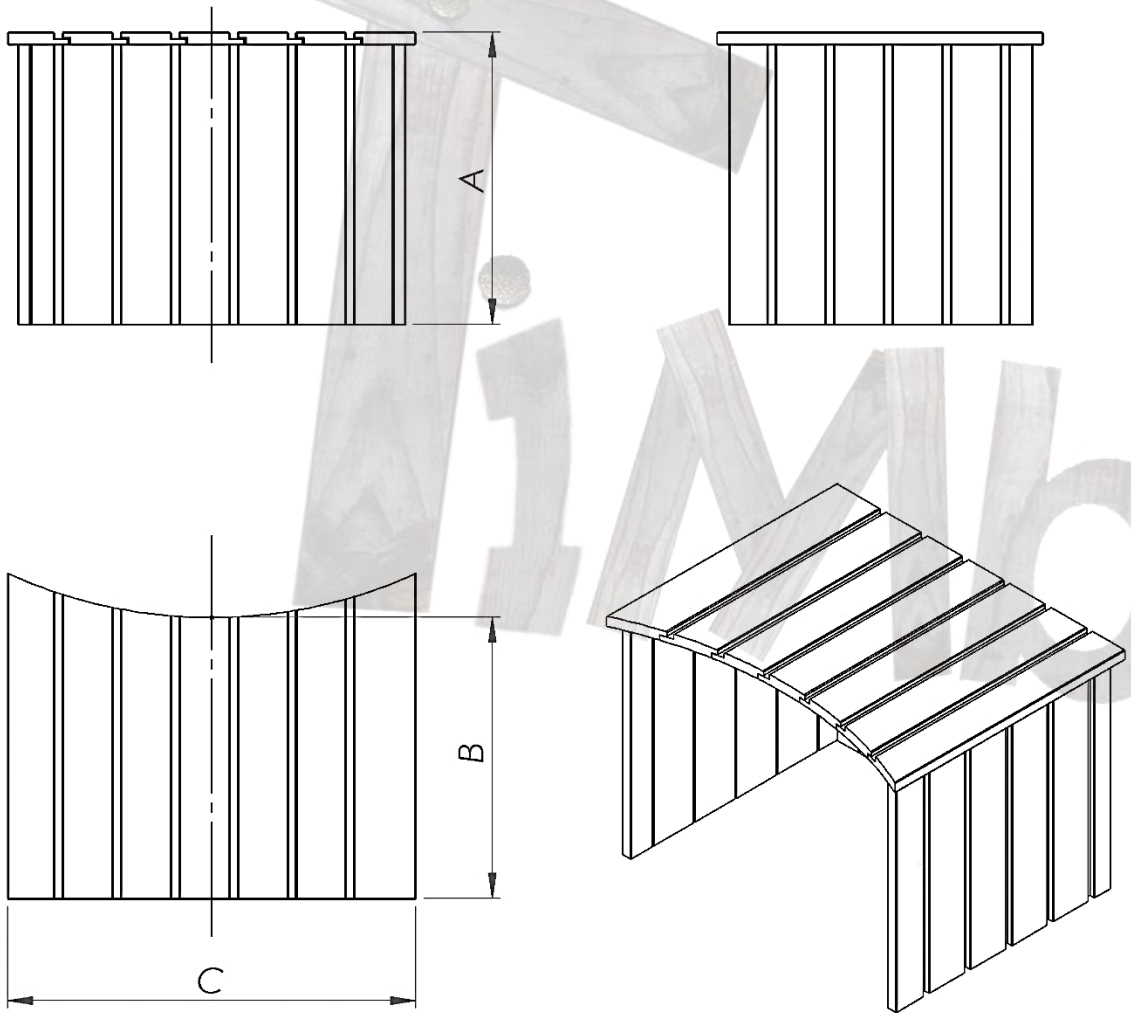

MODEL	WOODEN BOX
Sand filtration with wooden box	A: 800 mm B: 700 mm C: 600 mm
Electric heater with wooden box	A: 400 mm B: 600 mm C: 600 mm
Sand filtration + Electric heater with wooden box	A: 800 mm B: 700 mm C: 600 mm
Gas heater with wooden box	A: 940 mm B: 350 mm C: 500 mm

limberin

EXTERNAL COMFORT 2000 DELIVERY INFO

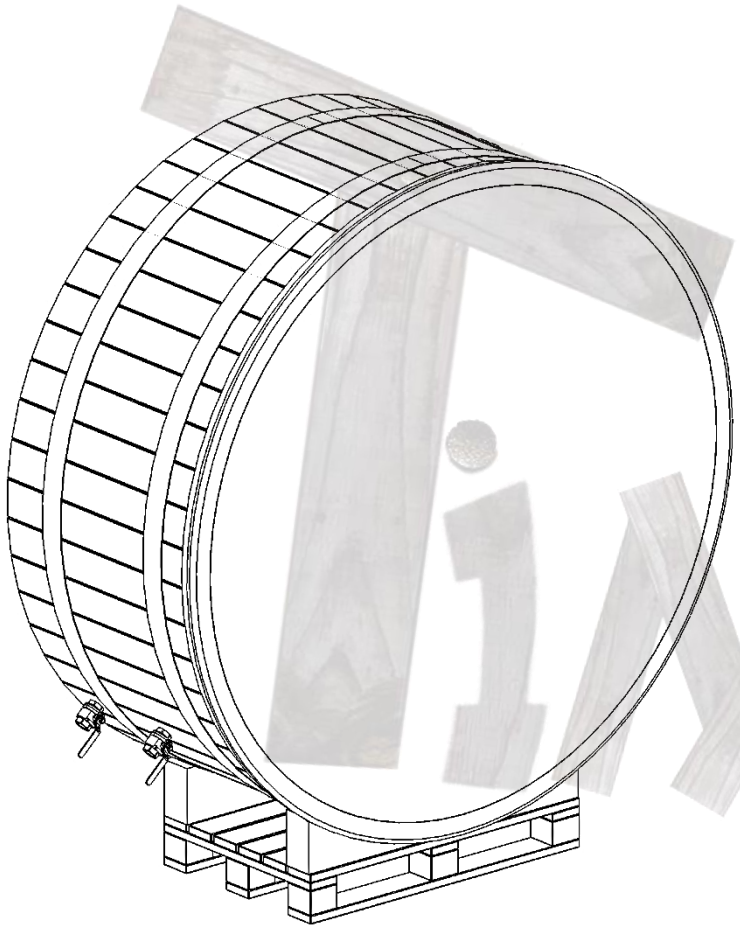

MODEL	DELIVERY
On the pallet packed model measurements:	Height: 2400 mm Width: 1300 mm Length: 2300 mm
Additional side package (stairs and heater)	Height: 900 mm Width: 800 mm Length: 1000 mm

