ENG: The measurements mentioned in the drawings and in TimberIN websites are only approximate data. They will differ from the measurements of the finished product. It is due to the fact that our products are individually designed and hand-made. However, if one or more measurements are very important, please mention before ordering. We will pay big attention to your requirements in the production process. This will ensure that the product will be produced as closely as possible to your requirements.

DE: Die in den Zeichnungen und auf den TimberIN-Websites genannten Maße sind nur ungefähre Angaben. Sie unterscheiden sich von den Maßen des fertigen Produkts. Dies liegt daran, dass unsere Produkte individuell gestaltet und handgefertigt werden. Wenn jedoch eine oder mehrere Messungen sehr wichtig sind, geben Sie dies bitte vor der Bestellung an. Wir werden Ihre Anforderungen im Produktionsprozess sehr berücksichtigen. Dadurch wird sichergestellt, dass das Produkt so genau wie möglich Ihren Anforderungen entspricht.

FR: Les mesures mentionnées dans les dessins et sur les sites Web TimberIN ne sont que des données approximatives. Ils différeront des mesures du produit fini. Cela est dû au fait que nos produits sont conçus individuellement et fabriqués à la main. Cependant, si une ou plusieurs mesures sont très importantes, merci de le mentionner avant de commander. Nous prêterons une grande attention à vos besoins dans le processus de production. Cela garantira que le produit sera fabriqué aussi près que possible de vos besoins.

DK: Målingerne nævnt på tegningerne og på TimberIN-websteder er kun omtrentlige data. De afviger fra målingerne af det færdige produkt. Det skyldes, at vores produkter er individuelt designet og håndlavet. Hvis en eller flere målinger dog er meget vigtige, skal du nævne det før du bestiller. Vi vil være meget opmærksomme på dine krav i produktionsprocessen. Dette vil sikre, at produktet produceres så tæt som muligt efter dine krav.

NO: Målingene nevnt på tegningene og på TimberIN nettsteder er bare omtrentlige data. De vil avvike fra målingene av det ferdige produktet. Det skyldes det faktum at produktene våre er individuelt designet og håndlaget. Imidlertid, hvis en eller flere målinger er veldig viktige, må du nevne før du bestiller. Vi vil ta stor vekt på dine krav i produksjonsprosessen. Dette vil sikre at produktet blir produsert så nært som mulig dine behov.

IT: Le misure menzionate nei disegni e nei siti Web di TimberIN sono solo dati approssimativi. Differiranno dalle misure del prodotto finito. È dovuto al fatto che i nostri prodotti sono progettati e realizzati a mano individualmente. Tuttavia, se una o più misurazioni sono molto importanti, si prega di menzionare prima di ordinare. Presteremo grande attenzione alle vostre esigenze nel processo di produzione. Ciò garantirà che il prodotto sarà prodotto il più vicino possibile alle vostre esigenze.

NL: De in de tekeningen en op TimberIN-websites genoemde metingen zijn slechts benaderende gegevens. Ze zullen verschillen van de afmetingen van het eindproduct. Het is te wijten aan het feit dat onze producten individueel zijn ontworpen en met de hand zijn gemaakt. Als een of meer metingen erg belangrijk zijn, vermeld dit dan voordat u bestelt. We zullen veel aandacht besteden aan uw eisen in het productieproces. Dit zorgt ervoor dat het product zo dicht mogelijk bij uw eisen wordt geproduceerd.

SWE: Mätningarna som nämns på ritningarna och på TimberIN-webbplatser är endast ungefärliga data. De kommer att skilja sig från måtten på den färdiga produkten. Det beror på att våra produkter är individuellt designade och handgjorda. Om en eller flera mätningar är mycket viktiga, berätta dock innan du beställer. Vi kommer att ägna stor uppmärksamhet åt dina krav i produktionsprocessen. Detta kommer att säkerställa att produkten produceras så nära dina krav som möjligt.

PL: Pomiary wymienione na rysunkach i na stronach internetowych TimberIN są jedynie danymi przybliżonymi. Będą się różnić od pomiarów gotowego produktu. Wynika to z faktu, że nasze produkty są indywidualnie zaprojektowane i wykonane ręcznie. Jeśli jednak co najmniej jeden pomiar jest bardzo ważny, należy o tym wspomnieć przed złożeniem zamówienia. Zwrócimy dużą uwagę na Twoje wymagania w procesie produkcyjnym. Zapewni to, że produkt będzie produkowany jak najbliżej Twoich wymagań.

IGLOO OUTDOOR GARDEN SAUNA
TECHNICAL SHEET

TimberIN
BALTIC SPA & SAUNAS

Table of contents

2500 MM IGLOO SAUNA. MODEL 1 3
4000 MM IGLOO SAUNA. MODEL 2 7
WOOD BURNING HARVIA HEATERS 11
WOOD BURNING HARVIA HEATER SAFETY DISTANCES APPLIED IN TIMBERIN SAUNAS 12
ELECTRIC HARVIA HEATERS 13
THERMAL INSULATION 14
PANORAMIC WINDOW TYPES 15
STANDARD WINDOW 15
PANORAMIC WINDOW (GLASS AREA 100%) 16

2500 MM IGLOO SAUNA. MODEL 1

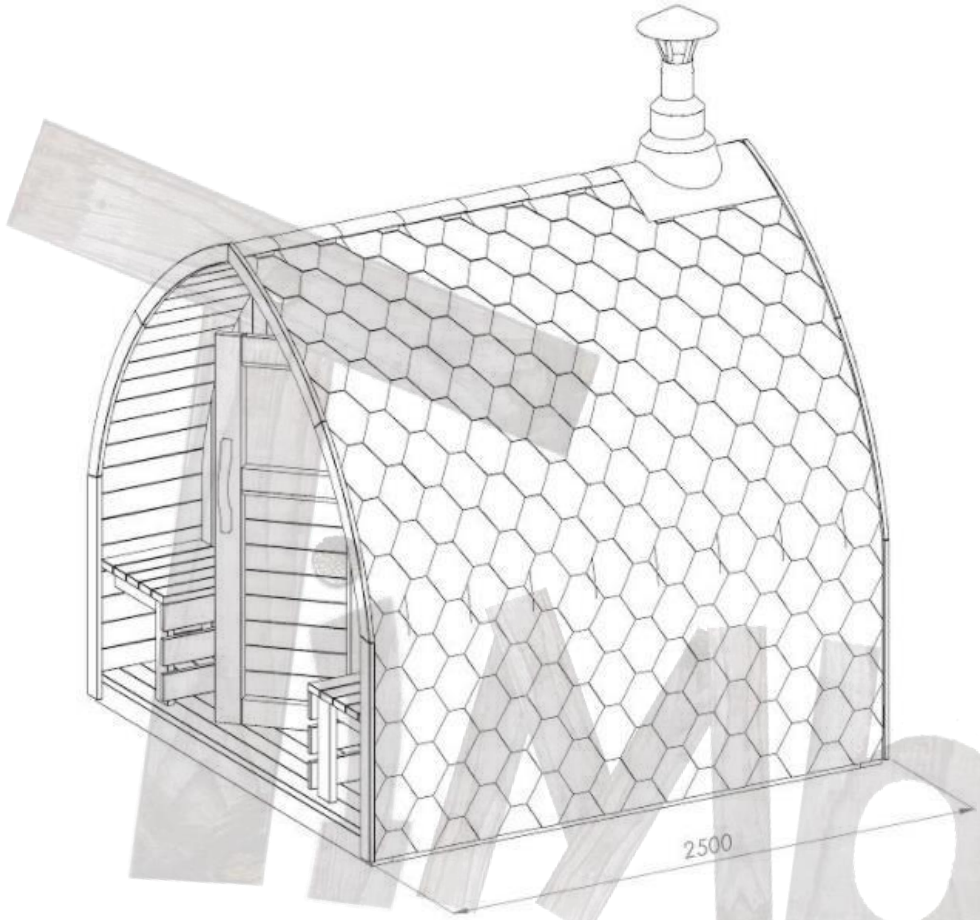

MODEL	2000 MM IGLOO
Seating capacity	2 - 4
Length	2500 mm
Height (without chimney)	2500 mm
Width	2350 mm
Weight	~1000 kg
Wood type	Spruce Thermowood
Recommended official “Harvia” heater	Harvia M3 Harvia Cilindro 9 kW

INTERIOR LAYOUT. MODEL 1

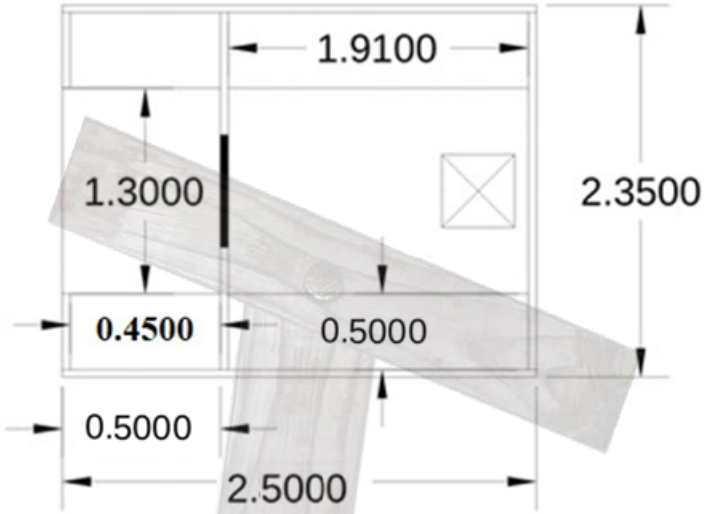

MODEL – IGLOO	INTERIOR LAYOUT of not insulated sauna
Length outside	2500 mm
Width outside	2350 mm
Door width	710 mm
Width of the benches	500 mm

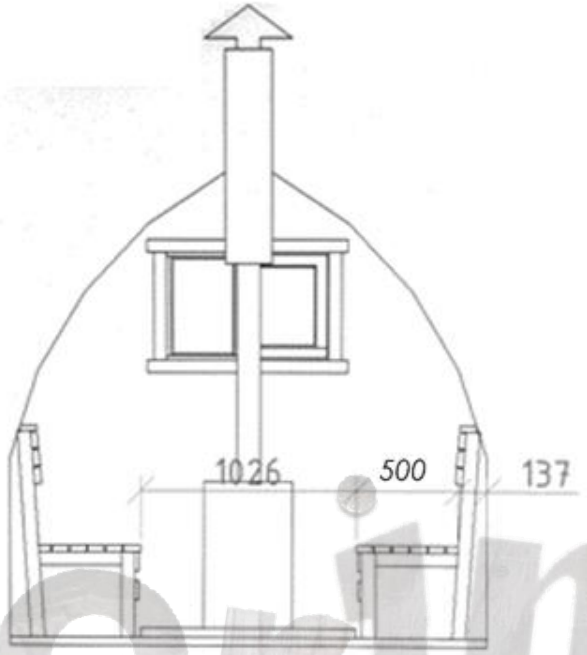

imberin

BASE MEASUREMENTS. MODEL 1

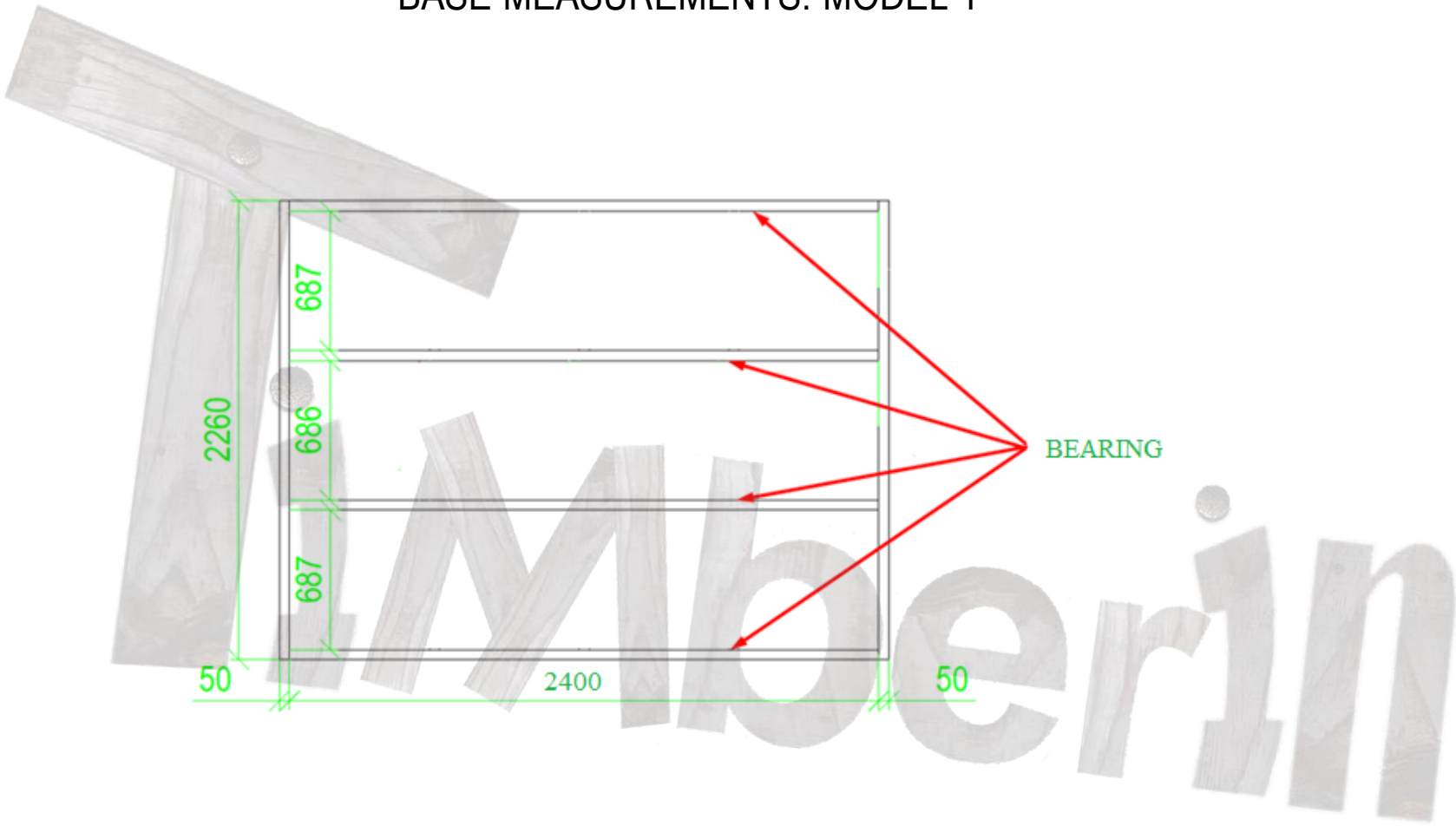

Please note that the base of the sauna may differ depending on the type of construction.

If that makes any influence on your order, please contact us separately and we will give all required information

DELIVERY INFO. MODEL 1

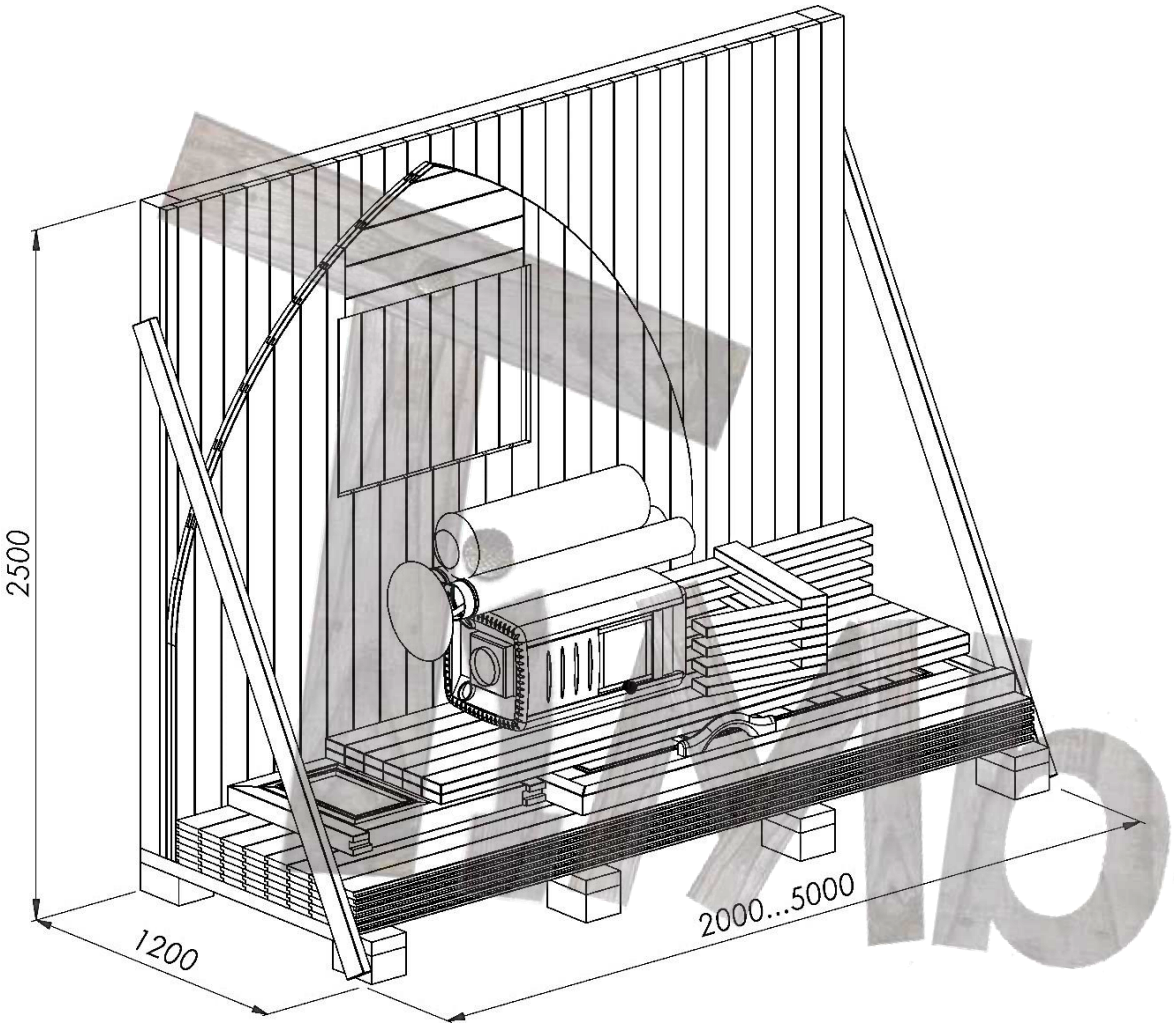

MODEL 2000 MM IGLOO	DELIVERY INFO
Assembly kit (flat packed) sauna measurements	Height: 2500 mm Width: 1200 mm Length: 2500 mm Weight ~1000 kg
Assembled sauna measurements	Height: 2500 mm Width: 2400 mm Length: 2580 mm Weight ~1000 kg

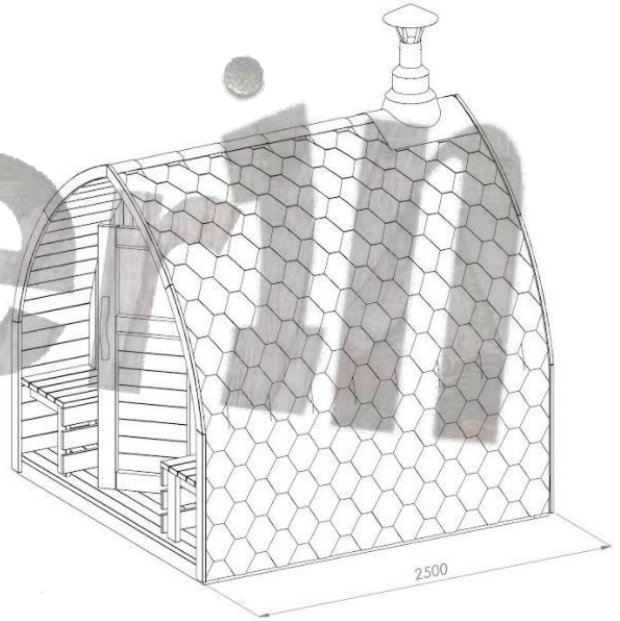

4000 MM IGLOO SAUNA. MODEL 2

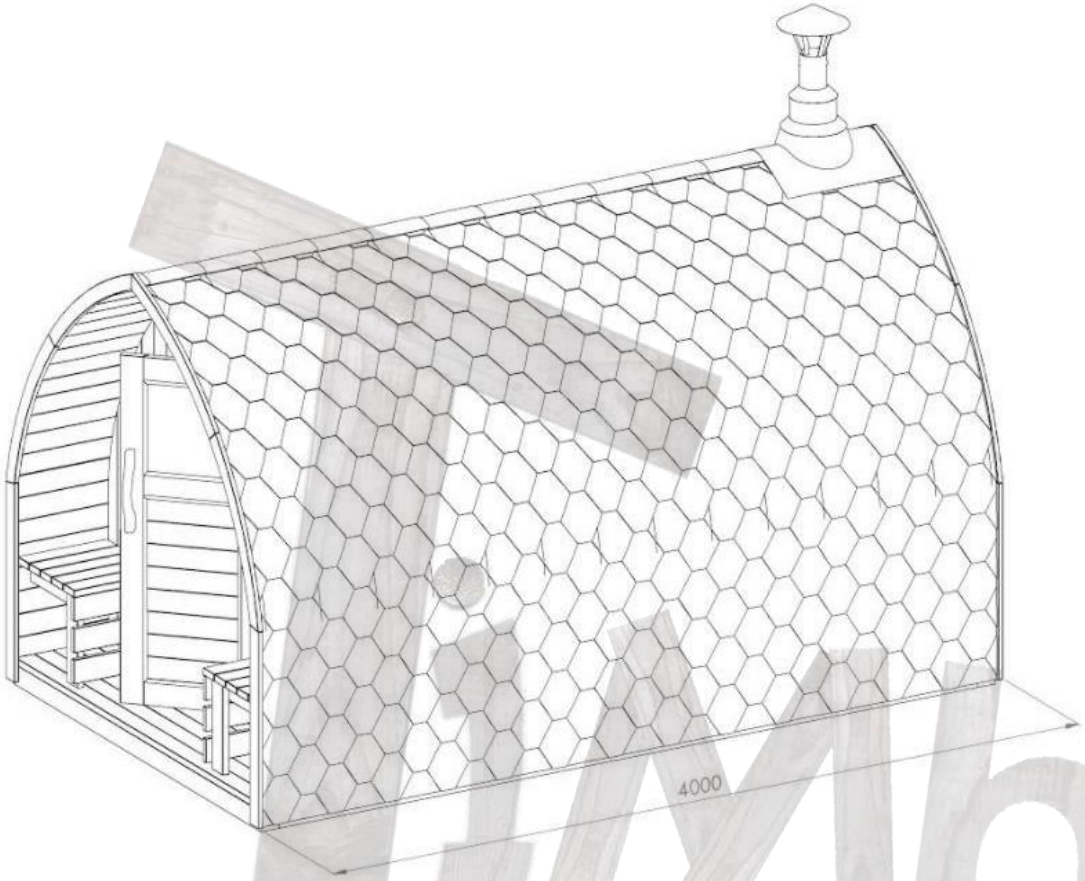

MODEL	3000 MM IGLOO
Seating capacity	6 - 8
Length	4000 mm
Height (without chimney)	2500 mm
Width	2350 mm
Weight	~1400 kg
Wood type	Spruce Thermowood
Recommended official “Harvia” heater	Harvia M3 Harvia Cilindro 9 kW

TimberIN

INTERIOR LAYOUT. MODEL 2

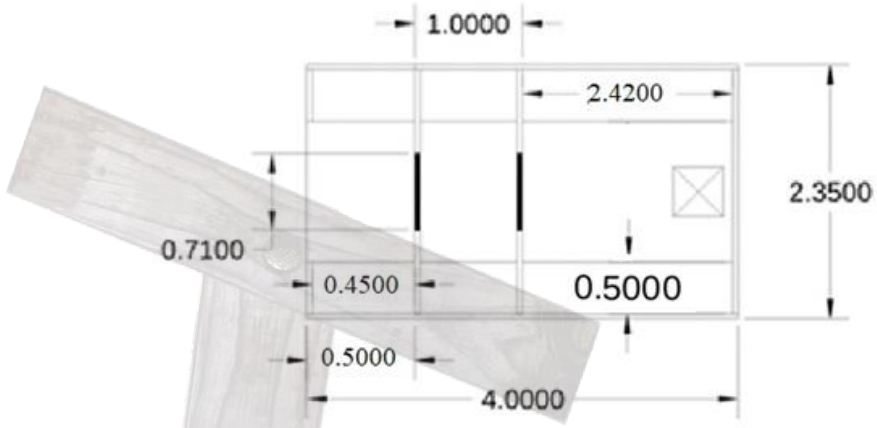

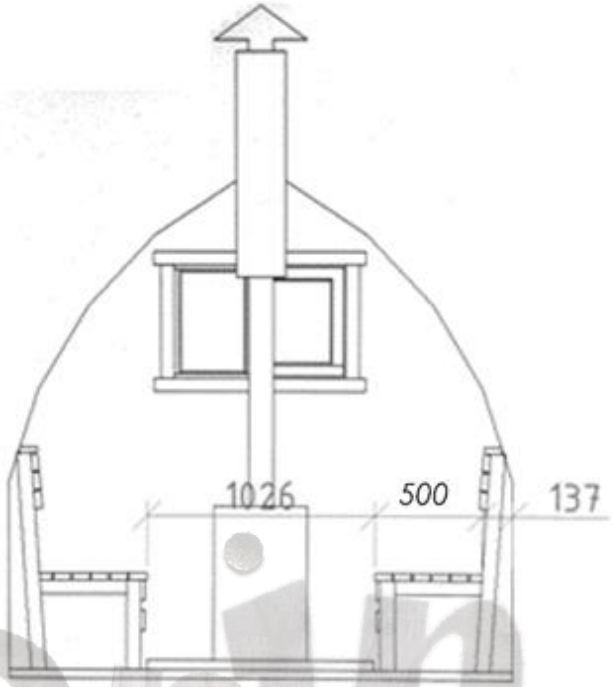

MODEL – IGLOO	INTERIOR LAYOUT of not insulated sauna
Length outside	4000 mm
Width outside	2350 mm
Door width	710 mm
Width of the benches	500 mm

Liberin

BASE MEASUREMENTS. MODEL 2

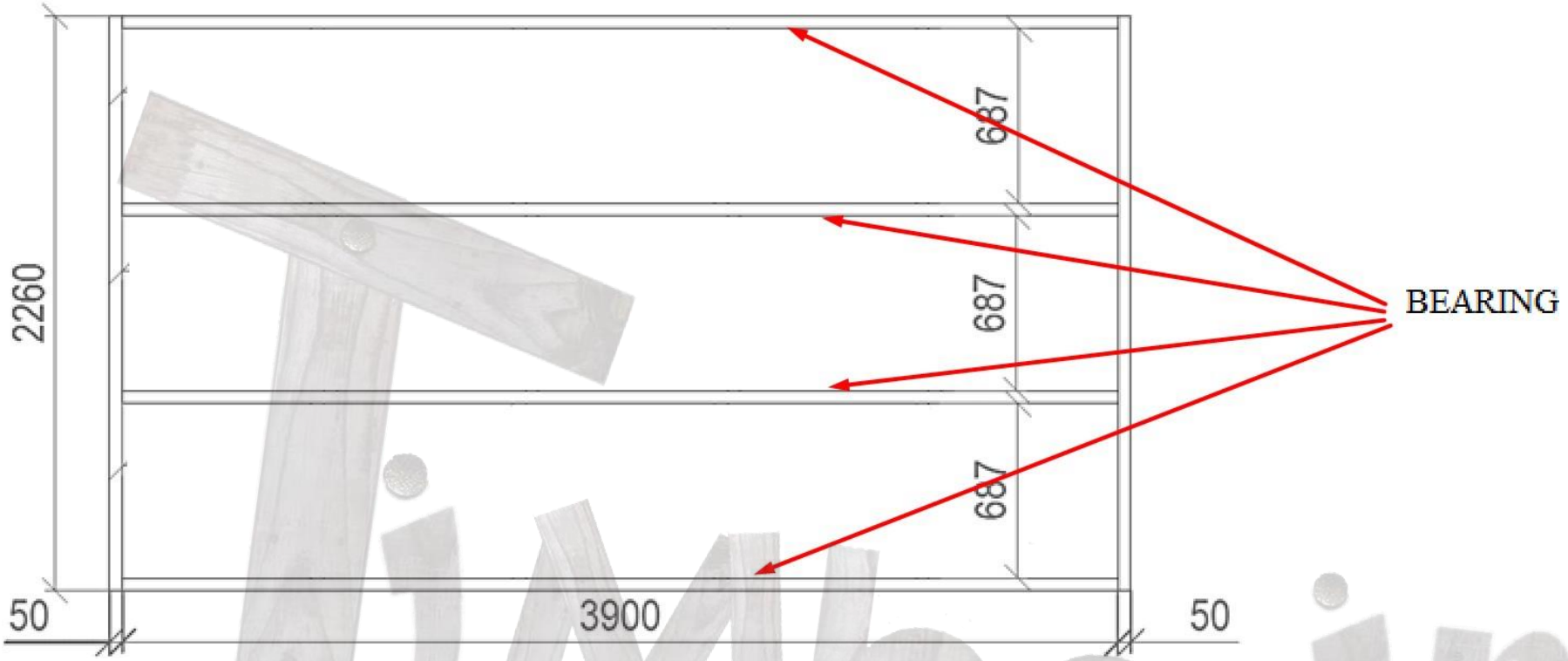

Please note that the base of the sauna may differ depending on the type of construction.

If that makes any influence on your order, please contact us separately and we will give all required information

DELIVERY INFO. MODEL 2

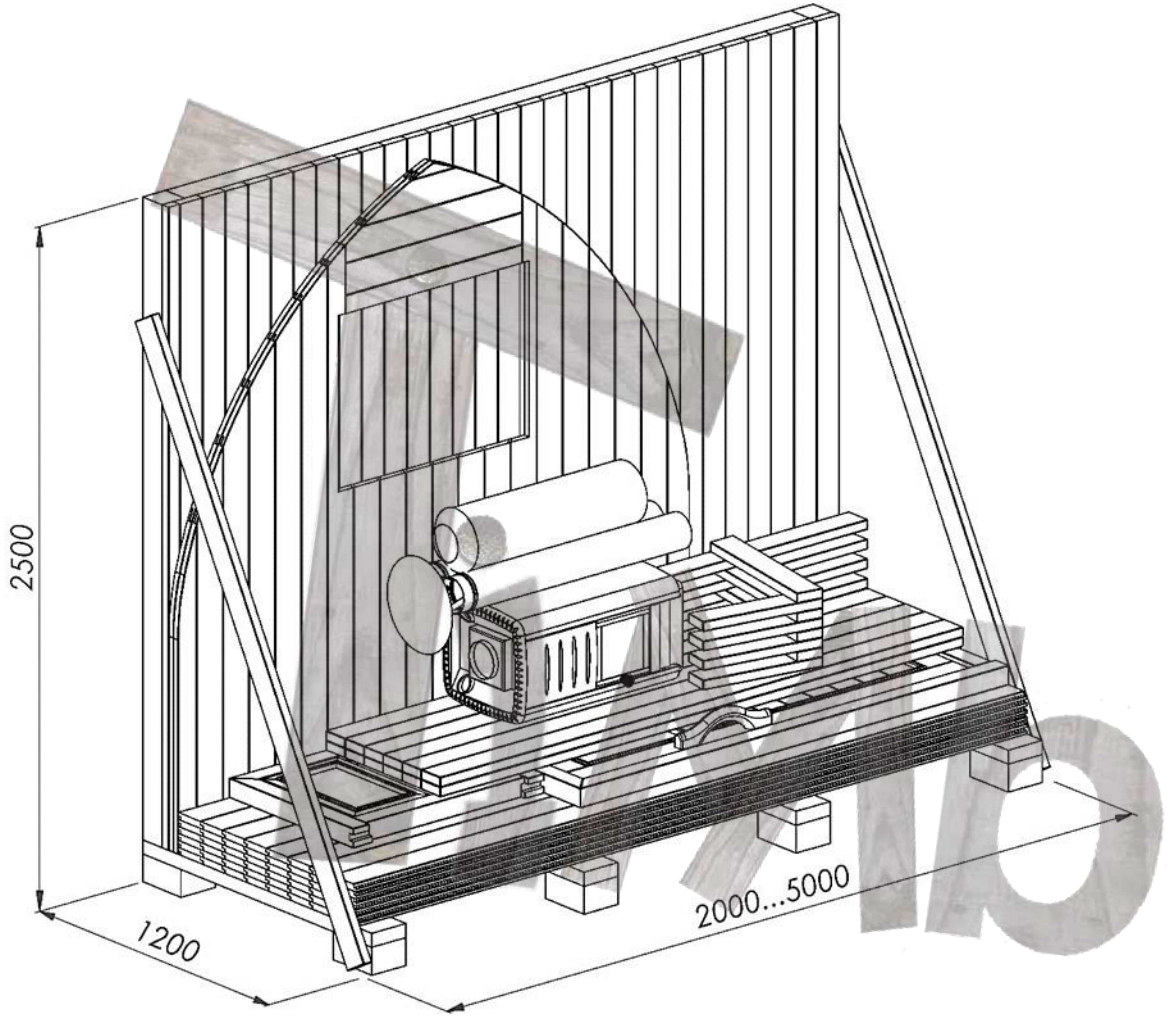

MODEL 3000 MM IGLOO	DELIVERY INFO
Assembly kit (flat packed) sauna measurements	Height: 2500 mm Width: 1200 mm Length: 4000 mm Weight ~1400 kg
Assembled sauna measurements	Height: 2500 mm Width: 2400 mm Length: 4000 mm Weight ~1400 kg

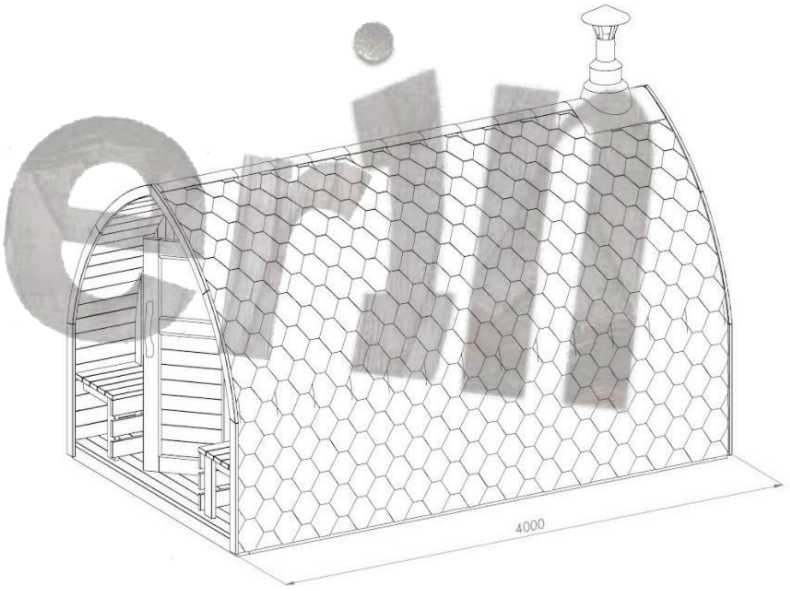

WOOD BURNING HARVIA HEATERS

Recommended for 2 – 4 meter sauna room
Harvia M3 + chimney



The Harvia M3 has a classic design and is suitable for smaller, woodburning saunas. It turns a sauna bath into a pleasurable experience and adds a touch of traditional sauna atmosphere. The even heat and efficient air circulation guarantee an enjoyable bath.

Output 16,5 kW

Stones max. 30 kg

User manual HERE

Recommended for 2 - 4 meter sauna room
Harvia M3 SL + chimney (logs loaded from outside instead of inside)



The SL models are designed for people who want to conveniently heat their sauna from another room or outside the building. SL stoves provide great bathing in small and medium-sized saunas.

Output 16,5 kW

Stones max. 30 kg

User manual HERE

Recommended for 4 – 5 meter sauna room
Harvia 20 PRO + chimney



Harvia 20 Pro gives a good hot bath in medium-sized saunas. It has a big stone space and an air-flow spoiler made of stainless steel. Through the cast-iron glass door the warm glow of the fire adds to the sauna atmosphere.

Output 24,1 kW

Stones max. 40 kg

User manual HERE

Recommended for 4 - 5 meter sauna room
Harvia 20 SL + chimney (logs loaded from outside instead of inside)



The SL models are designed for people who want to conveniently heat their sauna from another room or outside the building. SL stoves provide great bathing in small and medium-sized saunas.

Output 24,1 kW

Stones max. 40 kg

User manual HERE

WOOD BURNING HARVIA HEATER SAFETY DISTANCES APPLIED IN TIMBERIN SAUNAS ACCORING TO OFFICIAL HARVIA HEATERS SAFETY REQUIREMENTS

HARVIA M3 / HARVIA M3 SL:

- Walls and benches made of inflammable materials. The minimum safety distances to inflammable materials:
  - on either side – 25 cm (B),
  - behind the stove – 30 cm (C), *due to installed cetris panel behind the heater the distance can be minimized,*
  - in the front – approx. 30 cm (D).
- Heater ground area is covered with cetris panel.

Harvia 20 PRO / Harvia 20 SL:

- Walls and benches made of inflammable materials. The minimum safety distances to inflammable materials:
  - on either side – 30 cm (B),
  - behind the stove – 30 cm (C), *due to installed cetris panel behind the heater the distance can be minimized,*
  - in the front – approx. 30 cm (D).
- Heater ground area is covered with cetris panel.

SAUNA CHIMNEY:

- Non insulated chimney min. 50 cm from inflammable materials (*side materials can be cover with cetris panel to reduce the distance*).
- Insulation between roof and insulated chimney min. 10 cm.
- Chimney insulation going down from the roof min. 43 cm.

	A min.	B min.	C min.	D min.
M1, M2, M3/SL, Classic 140	1200	250	300	300
20 Pro, 20 SL/Duo, 20 ES Pro/S, 20 Boiler, 20 SL Boiler, Premium/VS, Classic 220/Duo, 20 RS/LS Pro	1300	300	300	300
26 Pro, Classic 280	1280	375	375	375
36, 36 Duo	1250	500	500	500
Linear 16, 16	1300	300	350	400
Linear 22, 22/S, Linear 22 RS/LS/ES, 22 RS/LS/ES S	1265	400	380	500
Linear 28	1380	400	400	500

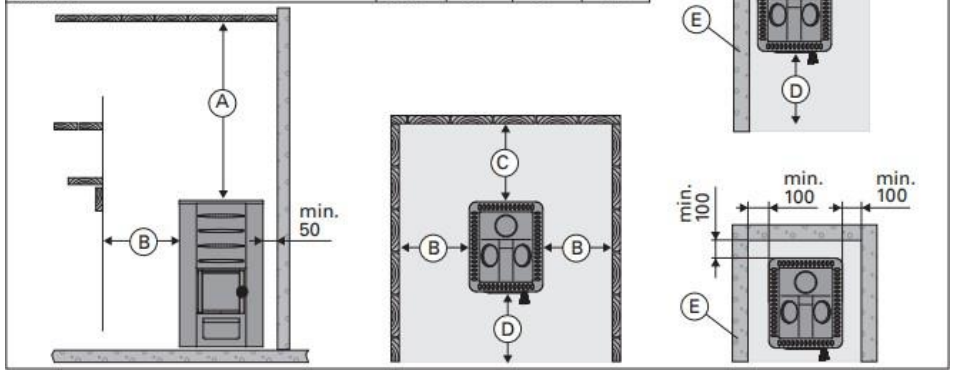

Figure 1 Safety distances (all dimensions in millimeters)

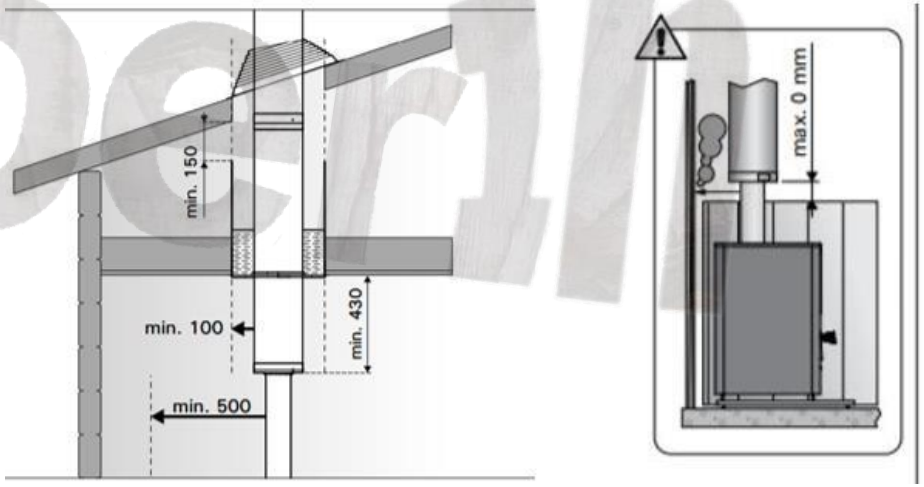

Figure 2 Safety distances for chimney (all dimensions in millimeters)

ELECTRIC HARVIA HEATERS

Recommended for 2 – 3 meter sauna room Cilindro 9 kW (PC90) with an integrated control unit	Recommended for 4 meter sauna room Cilindro 11kW (PC110XE) including a digital Harvia Xenio control panel.
 Harvia Cilindro electric heater's massive sauna stone amount provides enjoyable sauna bath. Cilindro has an apertured outer casing made of stainless steel. You can adjust the nature of the heat from soft to sharp by throwing water either to the side of the heater or straight on top of the stone pillar. **Output 9 kW** **Stones max. 80 kg** **User manual HERE**	 Harvia Cilindro 110EX heaters provide a smooth, yet powerful heat in saunas of all sizes. Exterior made from stainless steel looks impressive and is a great addition to any sauna. Sauna temperature can be seen in the digital display. **Output 10.8 kW** **Stones max. 120 kg** **User manual HERE**

iMberin

THERMAL INSULATION

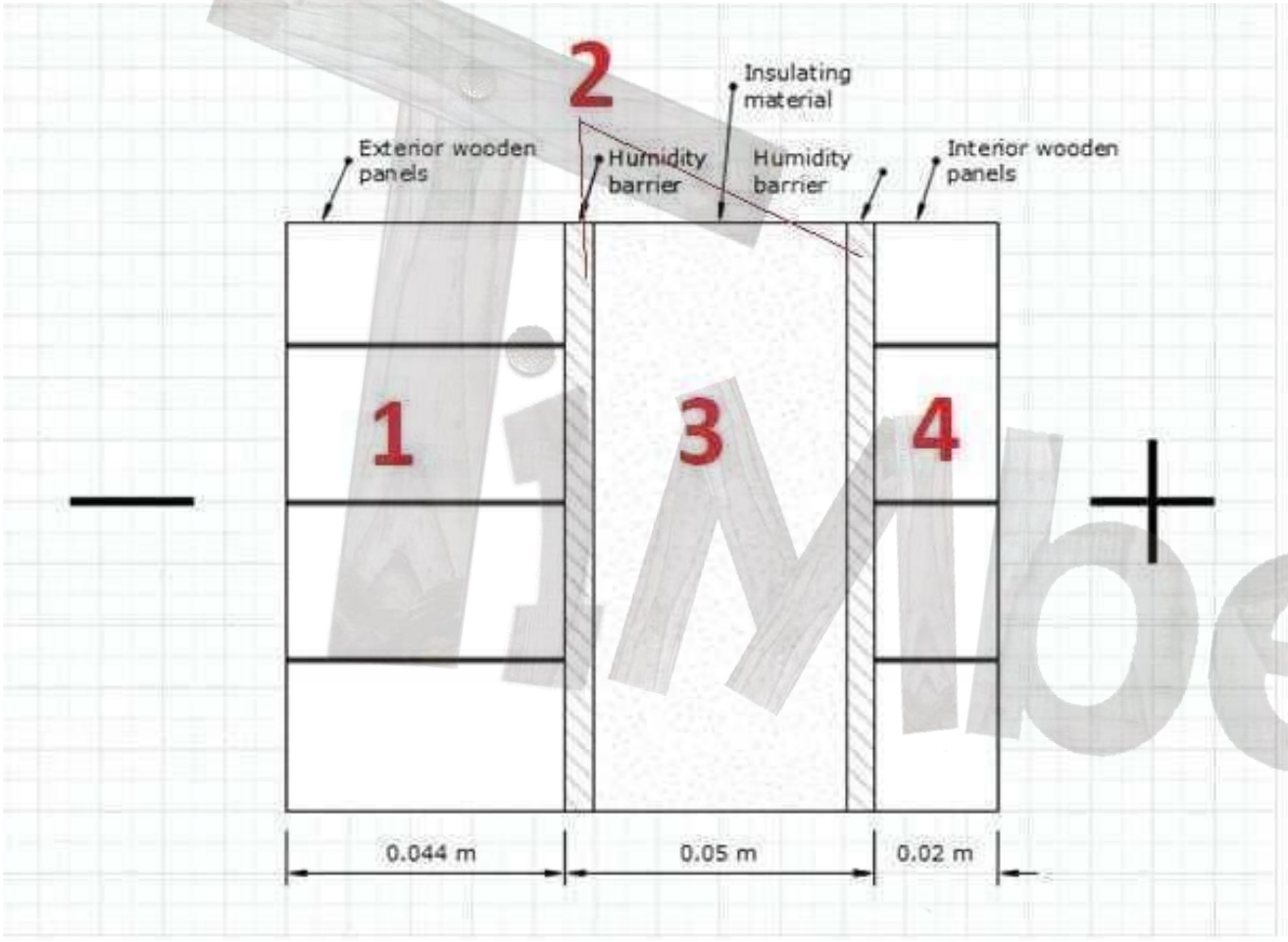

THE CROSS-SECTION VIEW OF INSULATED OUTDOOR SAUNA`S WALL

The first one (1) represents the wooden panels (44 mm thick).

The second one (2) – humidity barrier. The main aim of the humidity barrier is to eliminate the penetration of water or vapor to the insulation layer (3).

The nature of humidity barrier from outside and inside is different. The outside layer waterproofs the insulation and the inside humidity barrier does not allow the vapor to penetrate to the insulation layer. They both are very thin therefore their thickness is not mentioned.

The fourth (4) and the last layer is interior wooden panels, they are 20 mm of thickness. They are needed to support the insulation layer. It must be noted that the humidity barrier from the outside does not necessarily always have to be there. It depends on the type of sauna. The external wooden panels which form the wall of sauna are usually covered with bituminous shingles which act as waterproofing layer as well.

If you need more information then check our article HERE

PANORAMIC WINDOW TYPES

STANDARD WINDOW

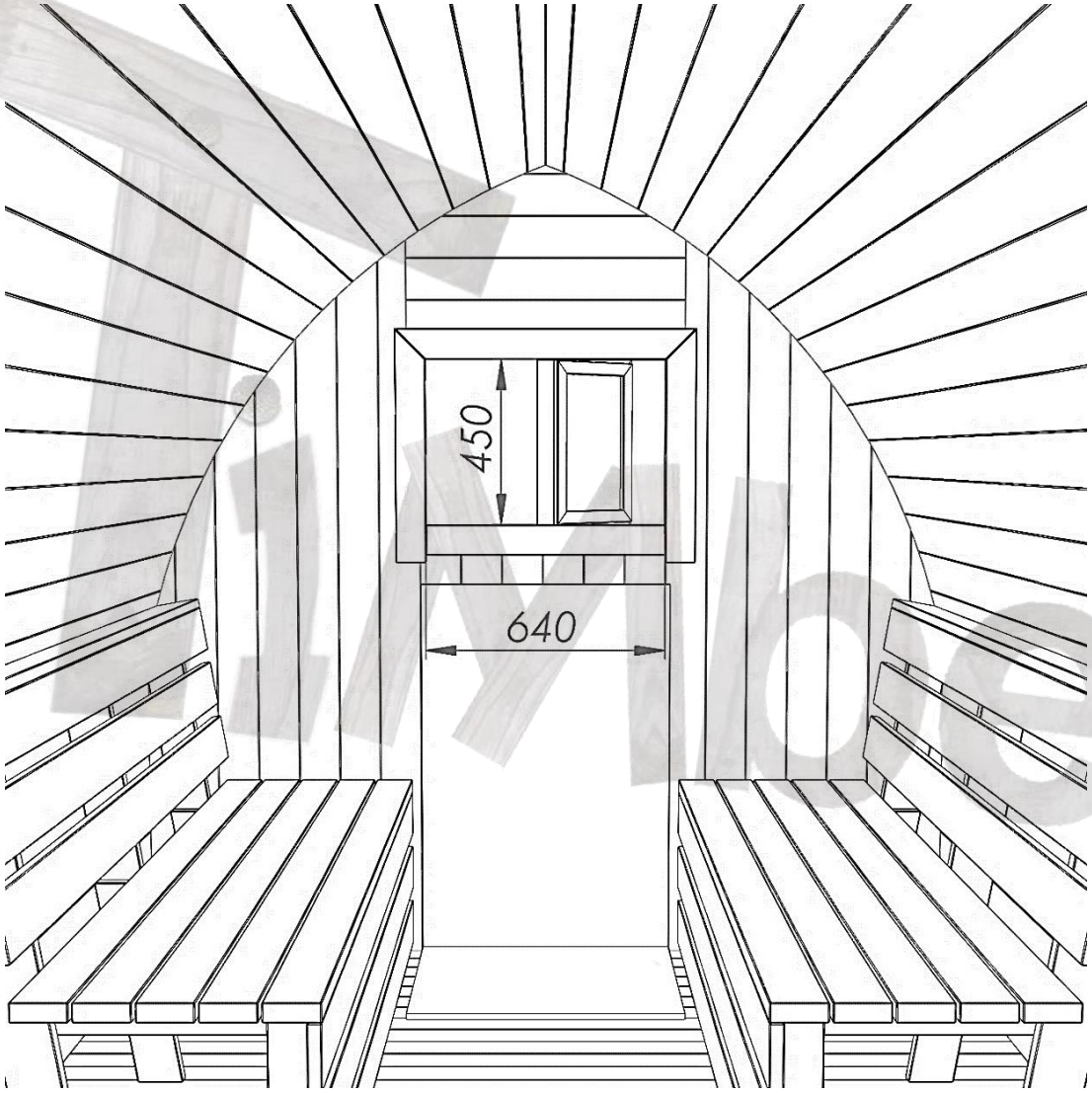

STANDARD WINDOW
Height: 450 mm Width: 640 mm

**Please note that the manufacturer depending on the model might install wooden edges for decorative / constructional purposes.

PANORAMIC WINDOW (GLASS AREA 100%)

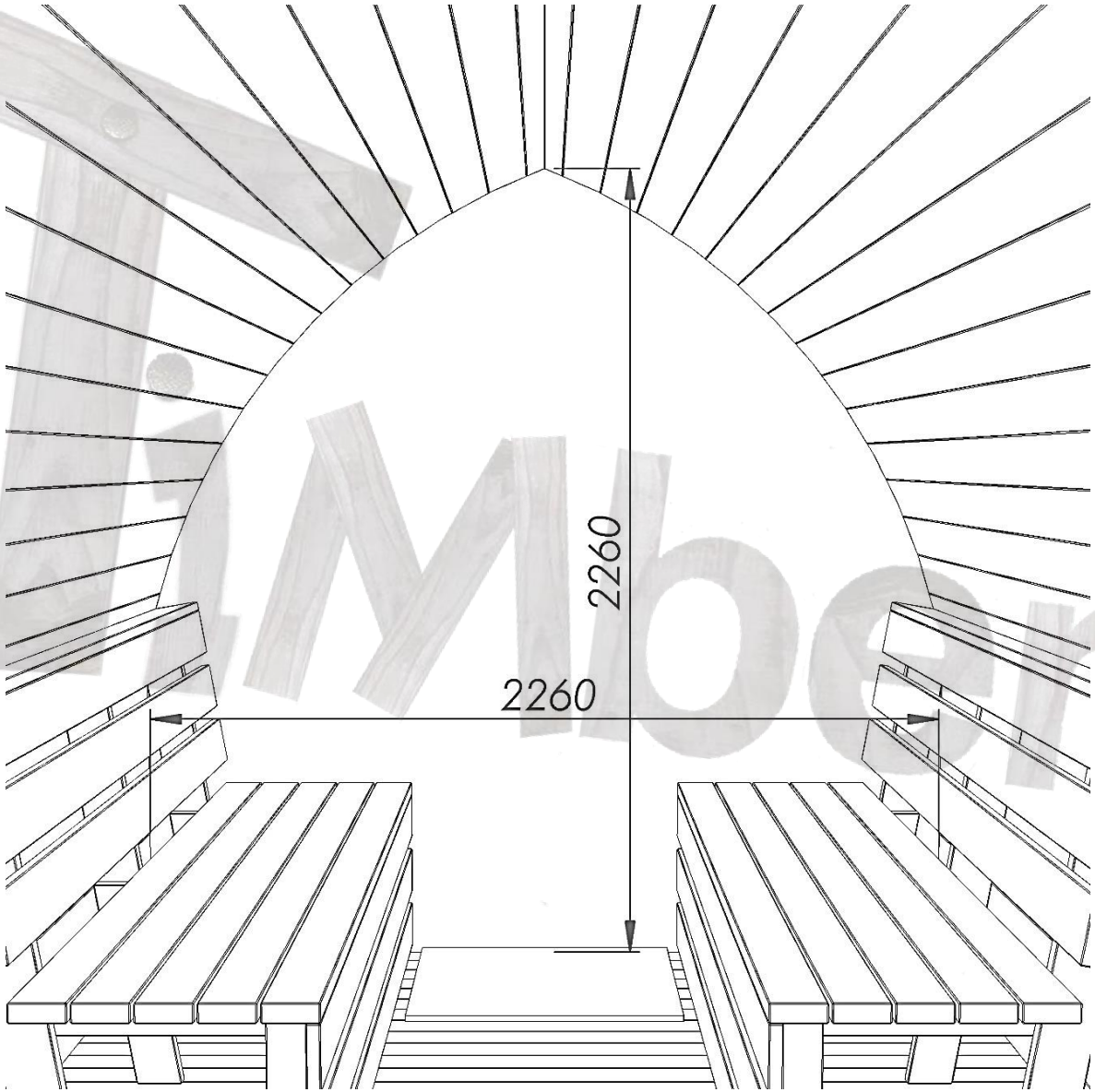

PANORAMIC WINDOW (GLASS AREA 100%)
Height: 2260 mm Width: 2260 mm

**Please note that the manufacturer depending on the model might install wooden edges for decorative / constructional purposes.

ADDITIONAL INFORMATION

The following pages add current TimberIN information (data as of 11/2026) to the original technical sheet on the previous pages. If a detail differs, please ask us; the approved order drawing applies.

In this section

MODEL 1 – 2,500 MM 18
MODEL 1 – LAYOUT 19
MODEL 2 – 4,000 MM 20
MODEL 2 – LAYOUT 21
HARVIA HEATERS 22
THERMAL INSULATION (OPTIONAL) 23
WINDOWS 24
ROOF COLOURS 25

MODEL 1 – 2,500 MM

Front view (without chimney)

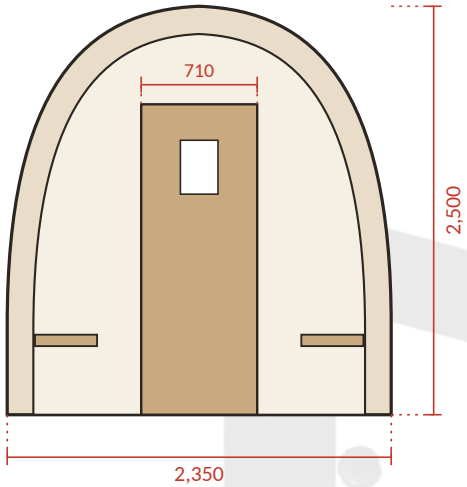

Side view

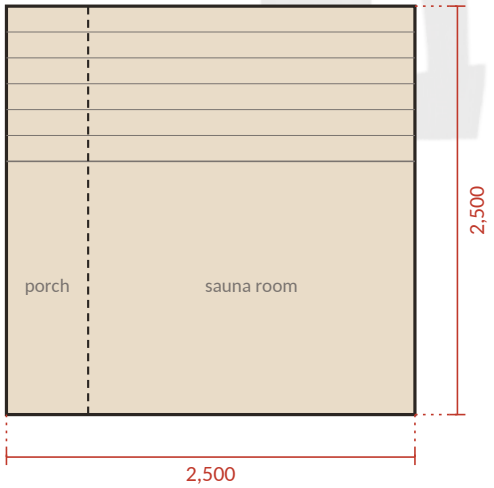

Model	Model 1 – 2,500 mm overall
Outside size (L × W × H)	2,500 × 2,350 × 2,500 mm (height without chimney)
Rooms	Sauna room 2,000 mm + porch 500 mm with side benches
Capacity	2–4 people
Entrance door width	710 mm
Bench depth	500 mm
Wood	Spruce or Thermowood
Heater	One Harvia heater included: M3 wood-burning with chimney or Cilindro PC90 electric; upgrades on the Harvia heaters page
Insulation	Optional: complete insulation with decorative panelling (the 2–3 m option)
Window	Standard rear-wall window or panoramic glass 50 %, 80 % or 100 %
Roof	Bitumen shingles: black, brown or green

Included: benches, wooden entrance door with a small window, ventilation, LED lighting under the benches in the sauna room, 2 Harvia lamps above the entrance door, porch with side benches, one Harvia heater.

Schematic drawing, not to scale. Dimensions in mm, approximate; the approved order drawing applies.

MODEL 1 – LAYOUT

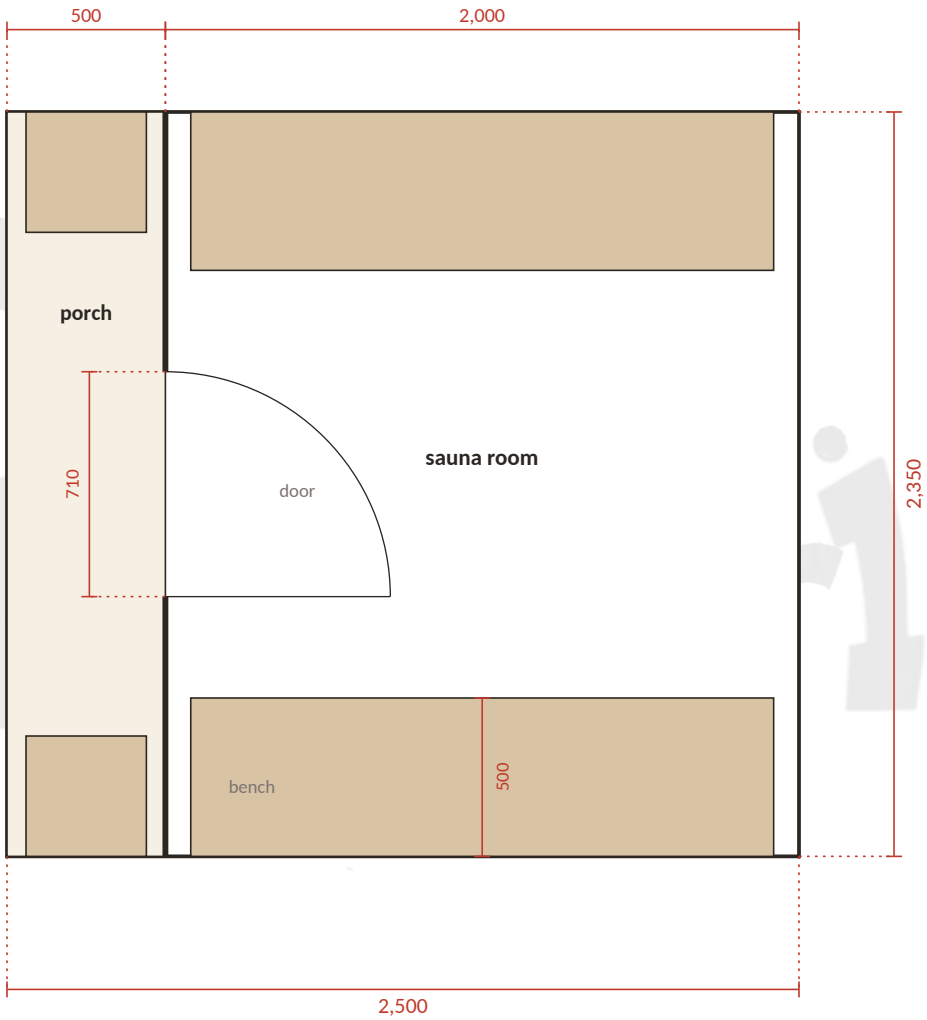

Schematic drawing, not to scale. Dimensions in mm, approximate; the approved order drawing applies.

MODEL 2 – 4,000 MM

Front view (without chimney)

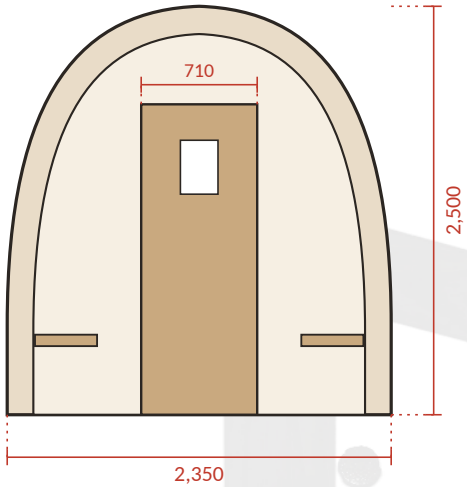

Side view

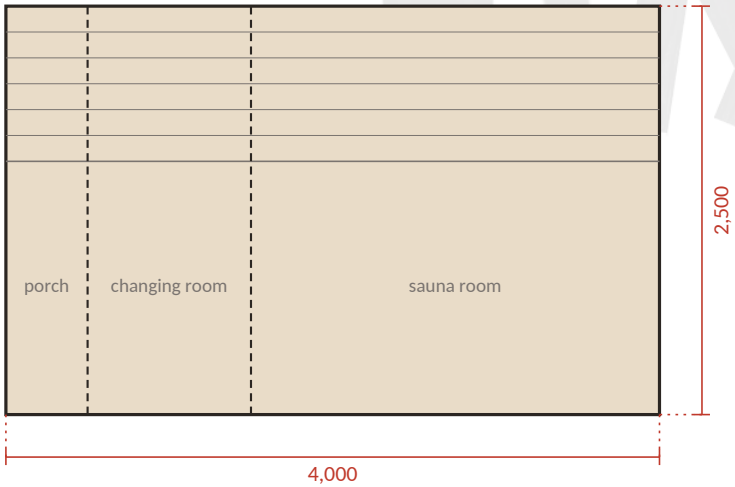

Model	Model 2 – 4,000 mm overall
Outside size (L × W × H)	4,000 × 2,350 × 2,500 mm (height without chimney)
Rooms	Sauna room 2,500 mm + changing room 1,000 mm with glass doors + porch 500 mm with side benches
Capacity	6–8 people
Entrance door width	710 mm
Bench depth	500 mm
Wood	Spruce or Thermowood
Heater	One Harvia heater included: M3 wood-burning with chimney or Cilindro PC90 electric; upgrades on the Harvia heaters page
Insulation	Optional: complete insulation with decorative panelling (the 4–5 m option)
Window	Standard rear-wall window or panoramic glass 50 %, 80 % or 100 %
Roof	Bitumen shingles: black, brown or green

Included: benches, wooden entrance door with a small window, ventilation, LED lighting under the benches in the sauna room, 2 Harvia lamps above the entrance door, porch with side benches, one Harvia heater.

Schematic drawing, not to scale. Dimensions in mm, approximate; the approved order drawing applies.

MODEL 2 – LAYOUT

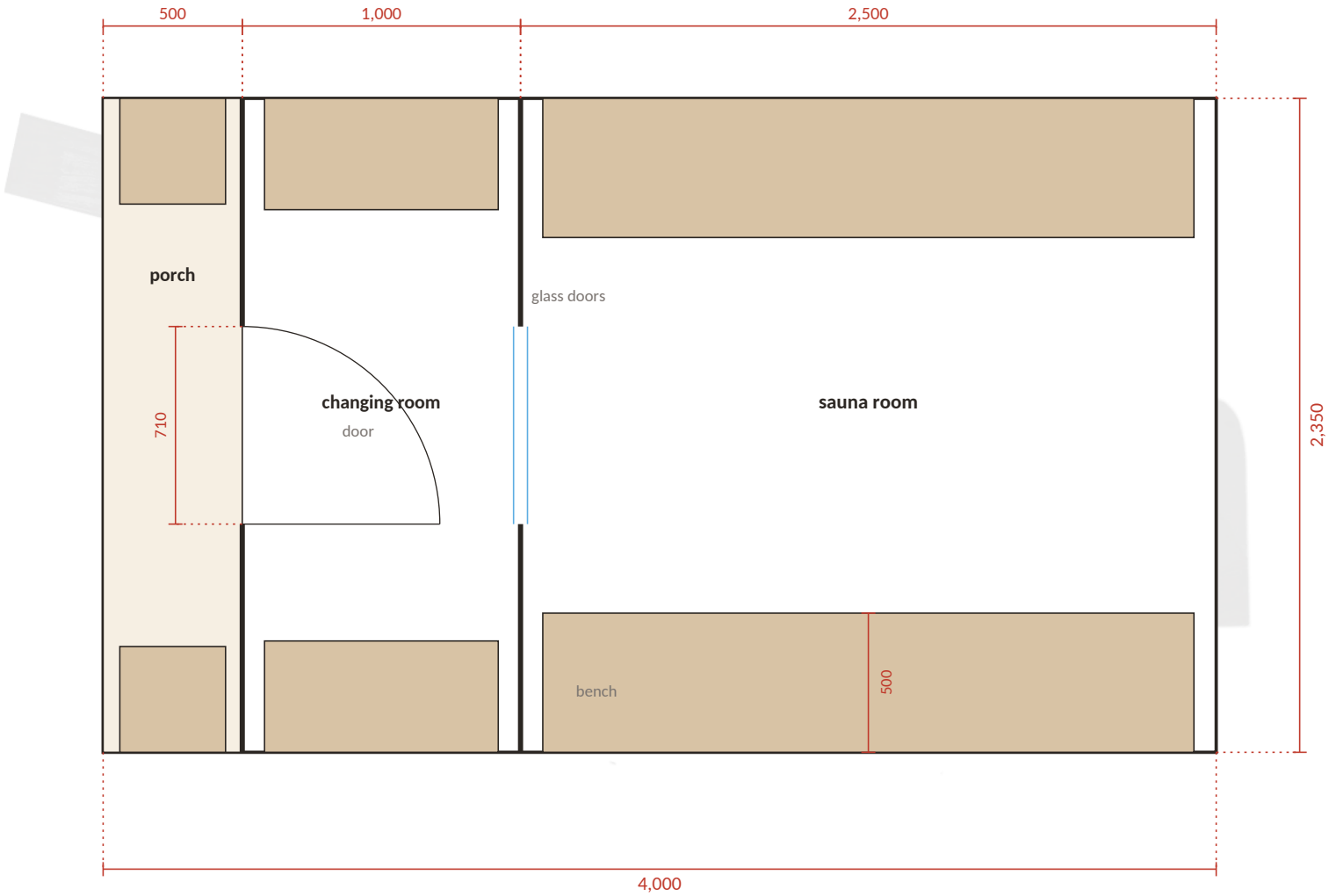

Schematic drawing, not to scale. Dimensions in mm, approximate; the approved order drawing applies.

HARVIA HEATERS

Heater	Type	Output	Sauna room	
Harvia M3 + chimney	Wood, loaded inside	16.5 kW	2–4 m	Included
Harvia M3 SL + chimney	Wood, logs loaded from outside	16.5 kW	2–4 m	Upgrade
Harvia 20 PRO + chimney	Wood, loaded inside	24.1 kW	4–5 m	Upgrade
Harvia 20 SL + chimney	Wood, logs loaded from outside	24.1 kW	4–5 m	Upgrade
Harvia Cilindro PC90	Electric, integrated controls	9 kW	2–3 m	Included
Harvia Cilindro PC90XW WiFi Steel	Electric, Wi-Fi controls	9 kW	2–3 m	Upgrade
Harvia Legend PO110FC WiFi	Electric, Wi-Fi controls	10.8 kW	by hot-room volume	Upgrade

One heater is included in the price: the M3 with chimney or the Cilindro PC90; choose exactly one. Sauna room = the heated room only: Model 1 about 2,000 mm, Model 2 about 2,500 mm long; the porch and the changing room are not heated. A longer pod does not need a larger heater by itself; heating depends on the hot-room volume, glazing and insulation.

Electric supply: PC90 / PC90XW 400 V 3N~, 3 × 16 A, cable 5 × 2.5 mm^2; PC90 also 230 V 1N~, 1 × 40 A; Legend PO110FC 400 V 3N~. A qualified electrician designs the supply, cable and protection from the heater manual.

THERMAL INSULATION (OPTIONAL)

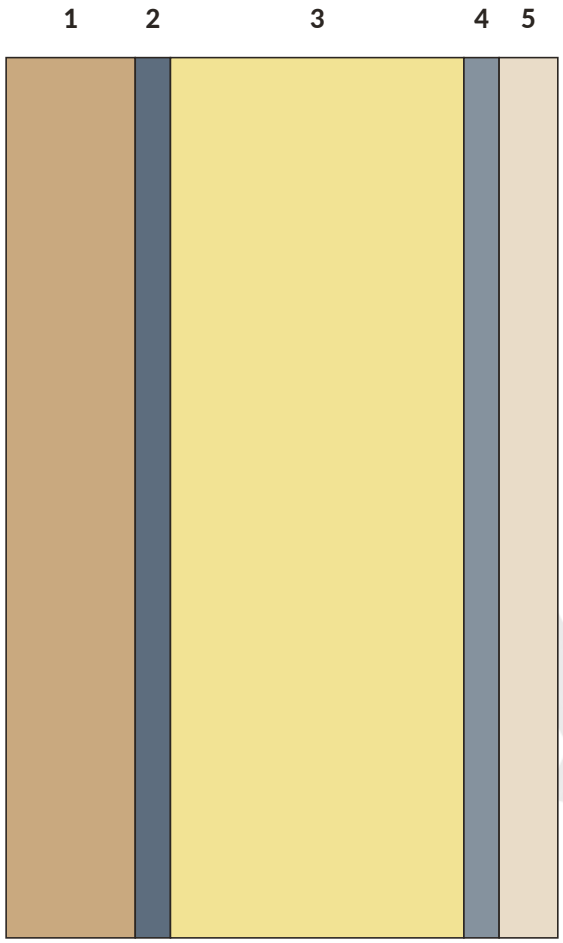

1. Exterior wooden boards, 44 mm

2. Humidity barrier (outside): keeps the insulation dry

3. Insulation

4. Humidity barrier (inside): stops vapour reaching the insulation

5. Interior wooden panelling, 20 mm

The outside humidity barrier is not needed on every model; the exterior boards are covered with bitumen shingles. Options: Model 1 – the 2–3 m insulation option; Model 2 – the 4–5 m option. Insulation is fitted at the factory and recommended for pre-assembled saunas; the exact material and thickness are confirmed in the order.

WINDOWS

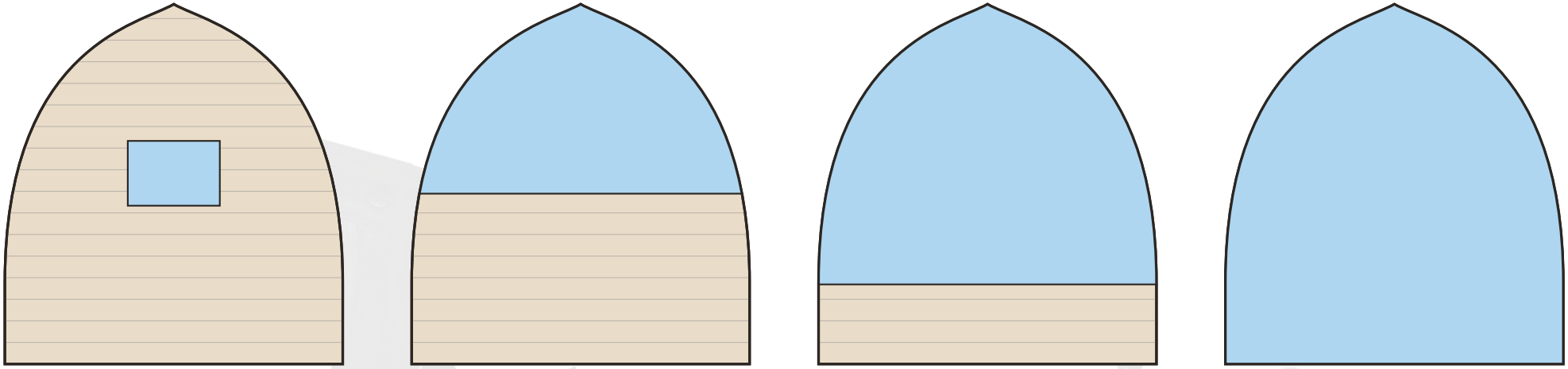

Standard window | Panoramic glass 50 % | Panoramic glass 80 % | Panoramic glass 100 %

Standard window	One window in the rear wall, about 640 mm wide × 450 mm high
Panoramic glass 50 %	Glass area about 1,950 × 1,190 mm (width × height)
Panoramic glass 80 %	Glass area about 2,260 × 1,760 mm
Panoramic glass 100 %	Glass area about 2,260 × 2,260 mm

All four windows are the same price. Wooden edges may be added for decoration or structure, depending on the model. Schematic drawing, not to scale. Dimensions in mm, approximate; the approved order drawing applies.

ROOF COLOURS

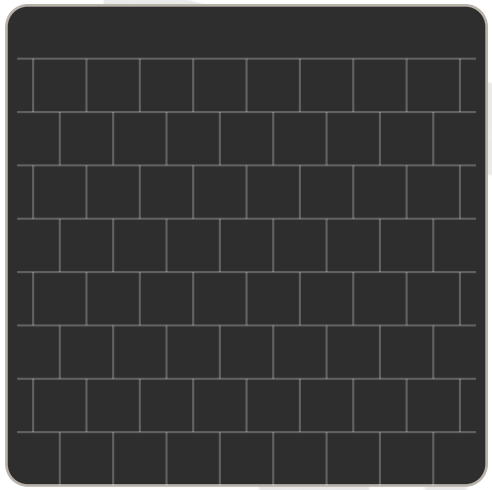

Black

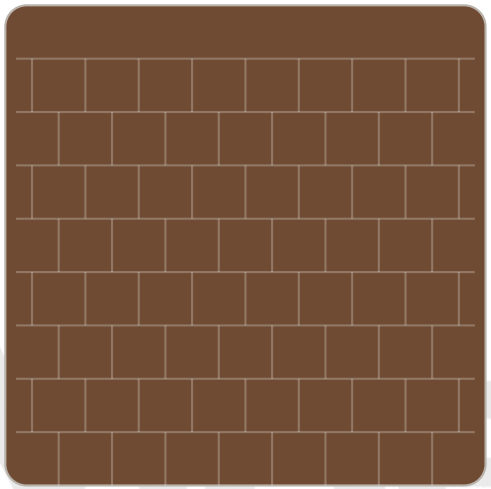

Brown

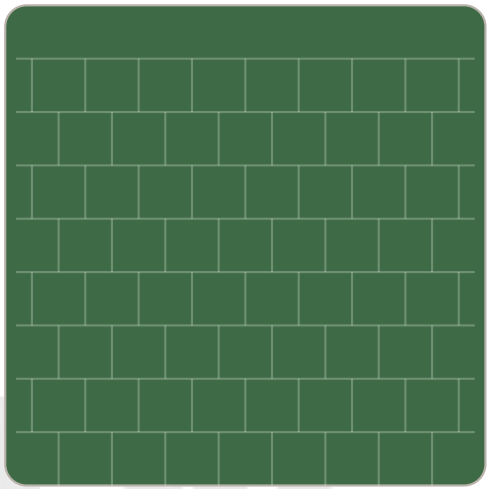

Green

Bitumen shingles on the arched roof; one colour per sauna, all the same price.