ENG: The measurements mentioned in the drawings and in TimberIN websites are only approximate data. They will differ from the measurements of the finished product. It is due to the fact that our products are individually designed and hand-made. However, if one or more measurements are very important, please mention before ordering. We will pay big attention to your requirements in the production process. This will ensure that the product will be produced as closely as possible to your requirements.

DE: Die in den Zeichnungen und auf den TimberIN-Websites genannten Maße sind nur ungefähre Angaben. Sie unterscheiden sich von den Maßen des fertigen Produkts. Dies liegt daran, dass unsere Produkte individuell gestaltet und handgefertigt werden. Wenn jedoch eine oder mehrere Messungen sehr wichtig sind, geben Sie dies bitte vor der Bestellung an. Wir werden Ihre Anforderungen im Produktionsprozess sehr berücksichtigen. Dadurch wird sichergestellt, dass das Produkt so genau wie möglich Ihren Anforderungen entspricht.

FR: Les mesures mentionnées dans les dessins et sur les sites Web TimberIN ne sont que des données approximatives. Ils différeront des mesures du produit fini. Cela est dû au fait que nos produits sont conçus individuellement et fabriqués à la main. Cependant, si une ou plusieurs mesures sont très importantes, merci de le mentionner avant de commander. Nous prêterons une grande attention à vos besoins dans le processus de production. Cela garantira que le produit sera fabriqué aussi près que possible de vos besoins.

DK: Målingerne nævnt på tegningerne og på TimberIN-websteder er kun omtrentlige data. De afviger fra målingerne af det færdige produkt. Det skyldes, at vores produkter er individuelt designet og håndlavet. Hvis en eller flere målinger dog er meget vigtige, skal du nævne det før du bestiller. Vi vil være meget opmærksomme på dine krav i produktionsprocessen. Dette vil sikre, at produktet produceres så tæt som muligt efter dine krav.

NO: Målingene nevnt på tegningene og på TimberIN nettsteder er bare omtrentlige data. De vil avvike fra målingene av det ferdige produktet. Det skyldes det faktum at produktene våre er individuelt designet og håndlaget. Imidlertid, hvis en eller flere målinger er veldig viktige, må du nevne før du bestiller. Vi vil ta stor vekt på dine krav i produksjonsprosessen. Dette vil sikre at produktet blir produsert så nært som mulig dine behov.

IT: Le misure menzionate nei disegni e nei siti Web di TimberIN sono solo dati approssimativi. Differiranno dalle misure del prodotto finito. È dovuto al fatto che i nostri prodotti sono progettati e realizzati a mano individualmente. Tuttavia, se una o più misurazioni sono molto importanti, si prega di menzionare prima di ordinare. Presteremo grande attenzione alle vostre esigenze nel processo di produzione. Ciò garantirà che il prodotto sarà prodotto il più vicino possibile alle vostre esigenze.

NL: De in de tekeningen en op TimberIN-websites genoemde metingen zijn slechts benaderende gegevens. Ze zullen verschillen van de afmetingen van het eindproduct. Het is te wijten aan het feit dat onze producten individueel zijn ontworpen en met de hand zijn gemaakt. Als een of meer metingen erg belangrijk zijn, vermeld dit dan voordat u bestelt. We zullen veel aandacht besteden aan uw eisen in het productieproces. Dit zorgt ervoor dat het product zo dicht mogelijk bij uw eisen wordt geproduceerd.

SWE: Mätningarna som nämns på ritningarna och på TimberIN-webbplatser är endast ungefärliga data. De kommer att skilja sig från måtten på den färdiga produkten. Det beror på att våra produkter är individuellt designade och handgjorda. Om en eller flera mätningar är mycket viktiga, berätta dock innan du beställer. Vi kommer att ägna stor uppmärksamhet åt dina krav i produktionsprocessen. Detta kommer att säkerställa att produkten produceras så nära dina krav som möjligt.

PL: Pomiary wymienione na rysunkach i na stronach internetowych TimberIN są jedynie danymi przybliżonymi. Będą się różnić od pomiarów gotowego produktu. Wynika to z faktu, że nasze produkty są indywidualnie zaprojektowane i wykonane ręcznie. Jeśli jednak co najmniej jeden pomiar jest bardzo ważny, należy o tym wspomnieć przed złożeniem zamówienia. Zwrócimy dużą uwagę na Twoje wymagania w procesie produkcyjnym. Zapewni to, że produkt będzie produkowany jak najbliżej Twoich wymagań.

OUTDOOR SAUNA FOR LIMITED GARDEN SPACE TECHNICAL SHEET

TimberIN
BALTIC SPA & SAUNAS

TABLE OF CONTENTS

OUTDOOR VERTICAL SAUNA FOR LIMITED GARDEN SPACE 3
GENERAL MEASUREMENTS 4
DIAMETER OPTIONS 5
TYPES OF SAUNA BENCHES 6
Classic two side benches 7
Modern curved benches 8
BASE STRUCTURE 9
DELIVERY INFO 10
WOOD BURNING HARVIA HEATERS 11
ELECTRIC HARVIA HEATERS 12
THERMAL INSULATION 13

OUTDOOR VERTICAL SAUNA FOR LIMITED GARDEN SPACE

TimberIN
BALTIC SPA & SAUNAS



MODEL	VERTICAL SAUNA
Seating capacity	2 - 4
Sauna weight	~700- 900 kg
Diameter	1800 mm or 2000 mm
Wood type	Spruce Larch Thermowood
Recommended official “Harvia” heater	Harvia M3 Harvia M3 SL Harvia Vega 8 kW
*All measurements represent not insulated sauna	

3D view of this model

GENERAL MEASUREMENTS

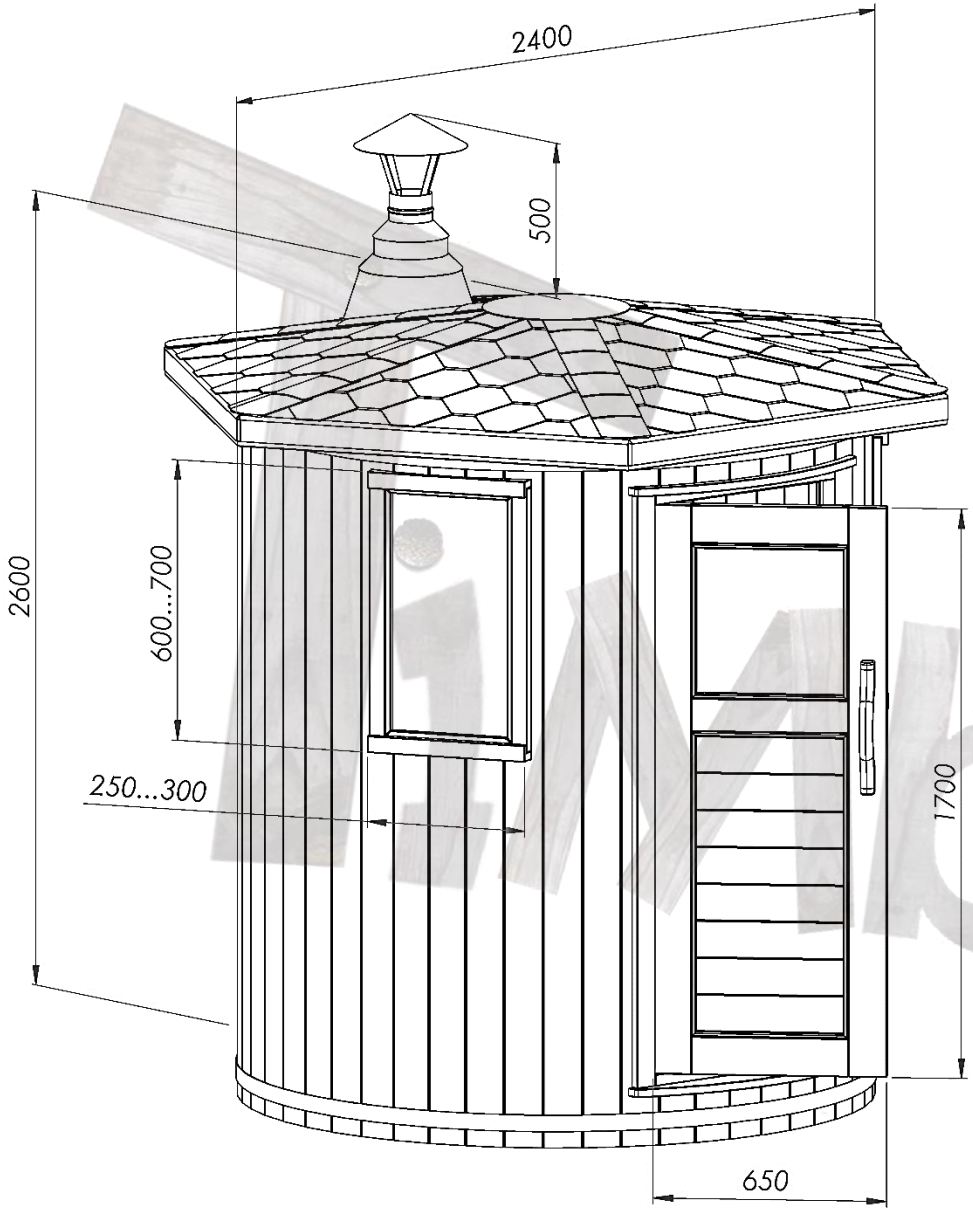

MODEL	GENERAL MEASUREMENETS
Door width	650 mm
Door height	1700 mm
Window width	250 – 300 mm
Window length	600 – 700 mm
Sauna height (without chimney)	2600 mm
Chimney height	500 mm
Roof width	2400 mm

iMperin

DIAMETER OPTIONS

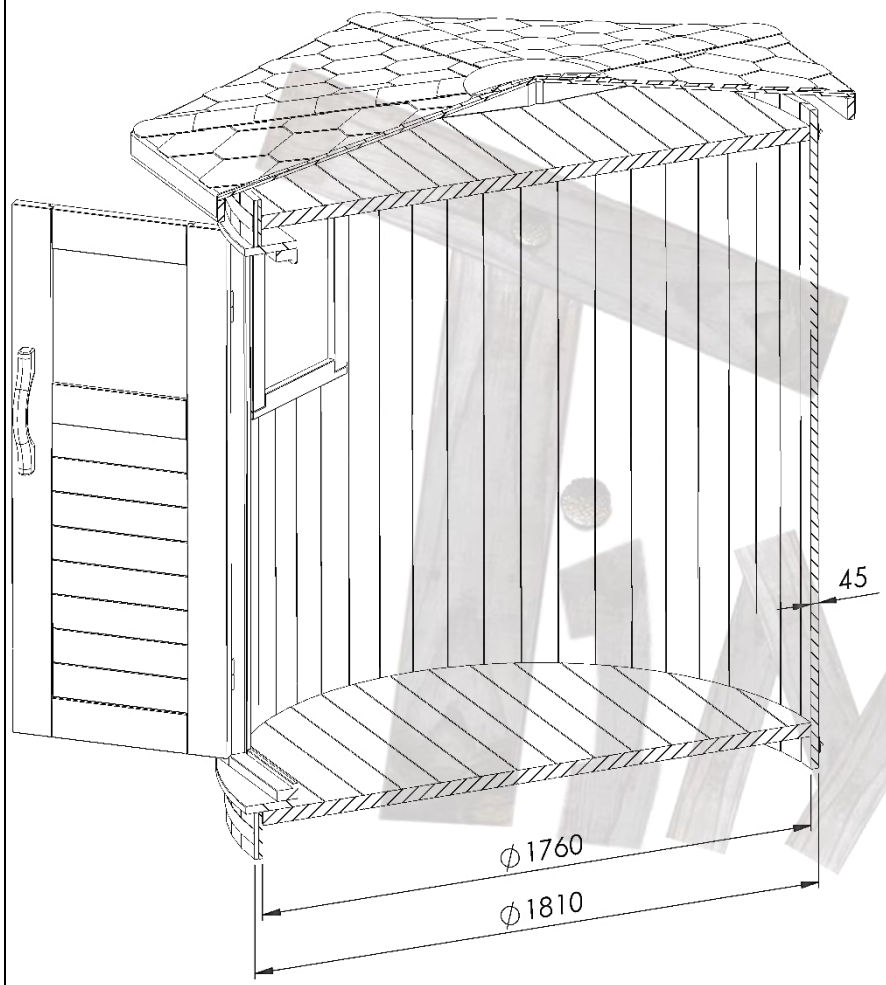

MODEL	OPTION NO. 1
Internal diameter	1760 mm
External diameter	1810 mm
Wall thickness	45 mm

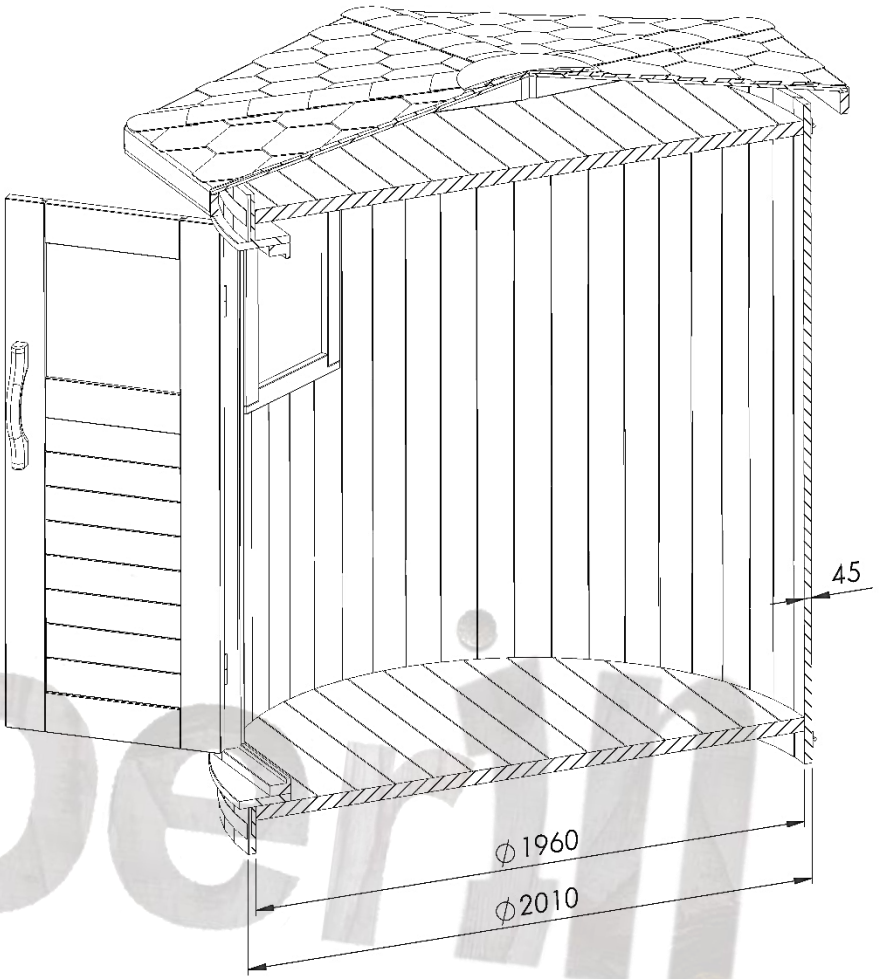

MODEL	OPTION NO. 2
Internal diameter	1960 mm
External diameter	2010 mm
Wall thickness	45 mm

timberin

TYPES OF SAUNA BENCHES

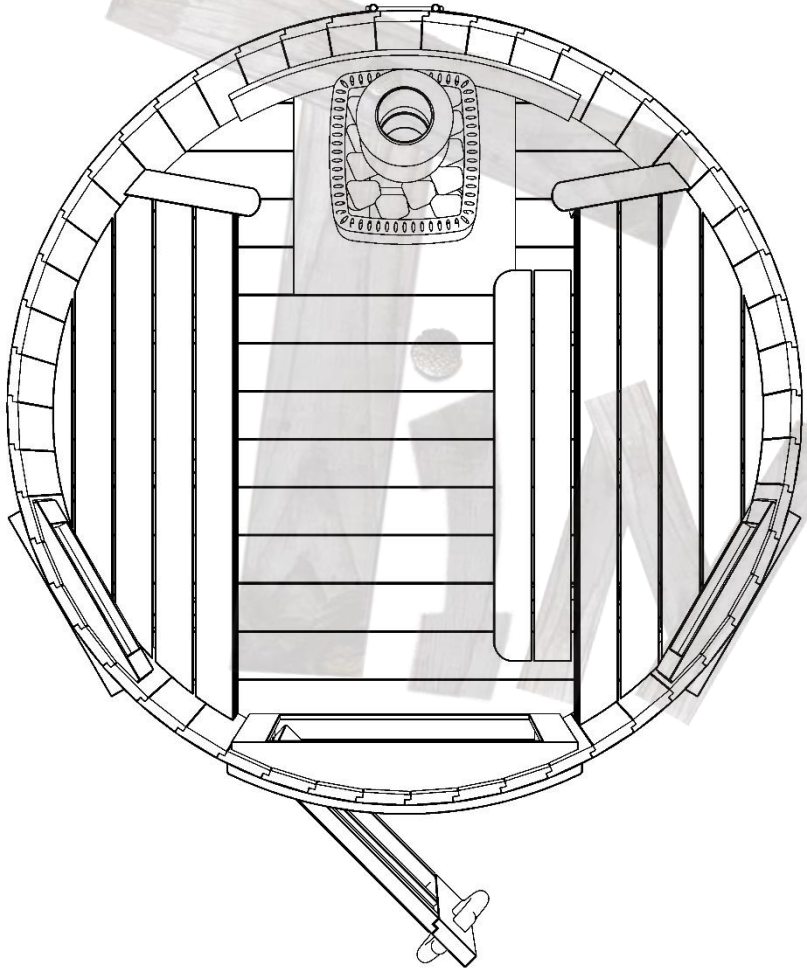

CLASSIC TWO SIDE BENCHES

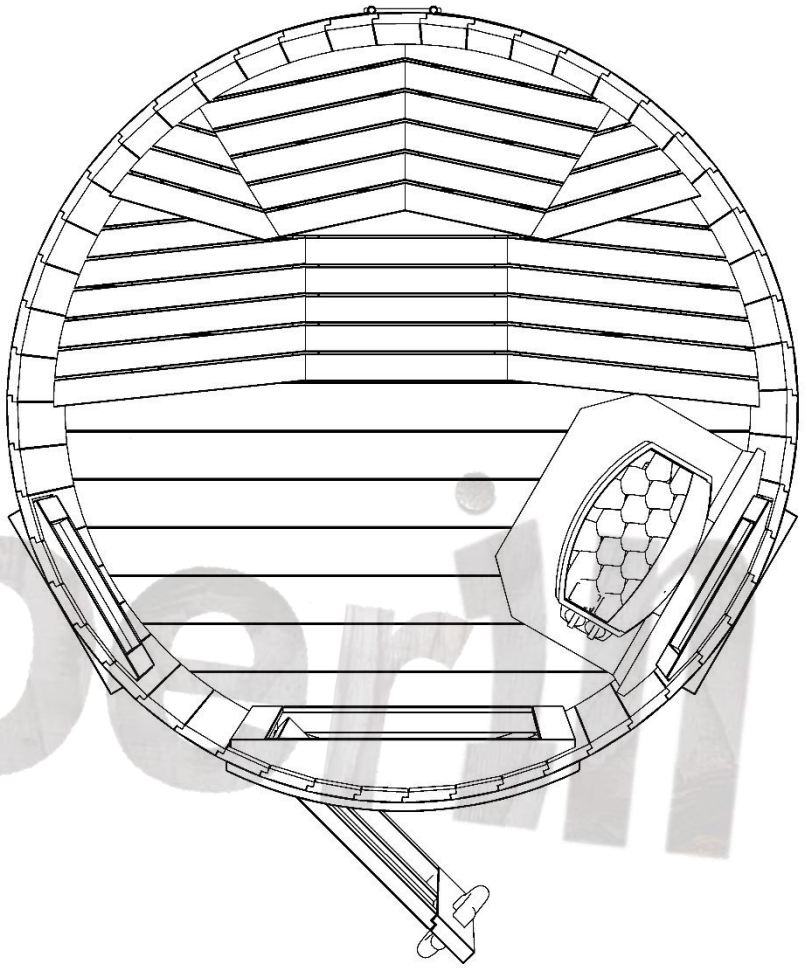

MODERN CURVED BENCHES

CLASSIC TWO SIDE BENCHES

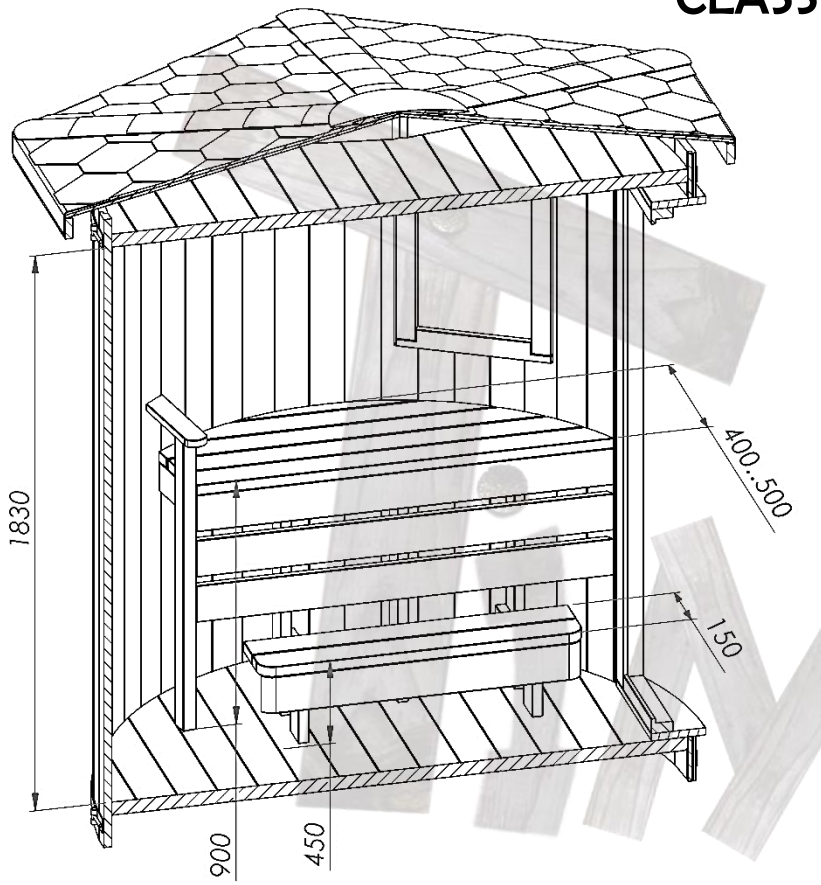

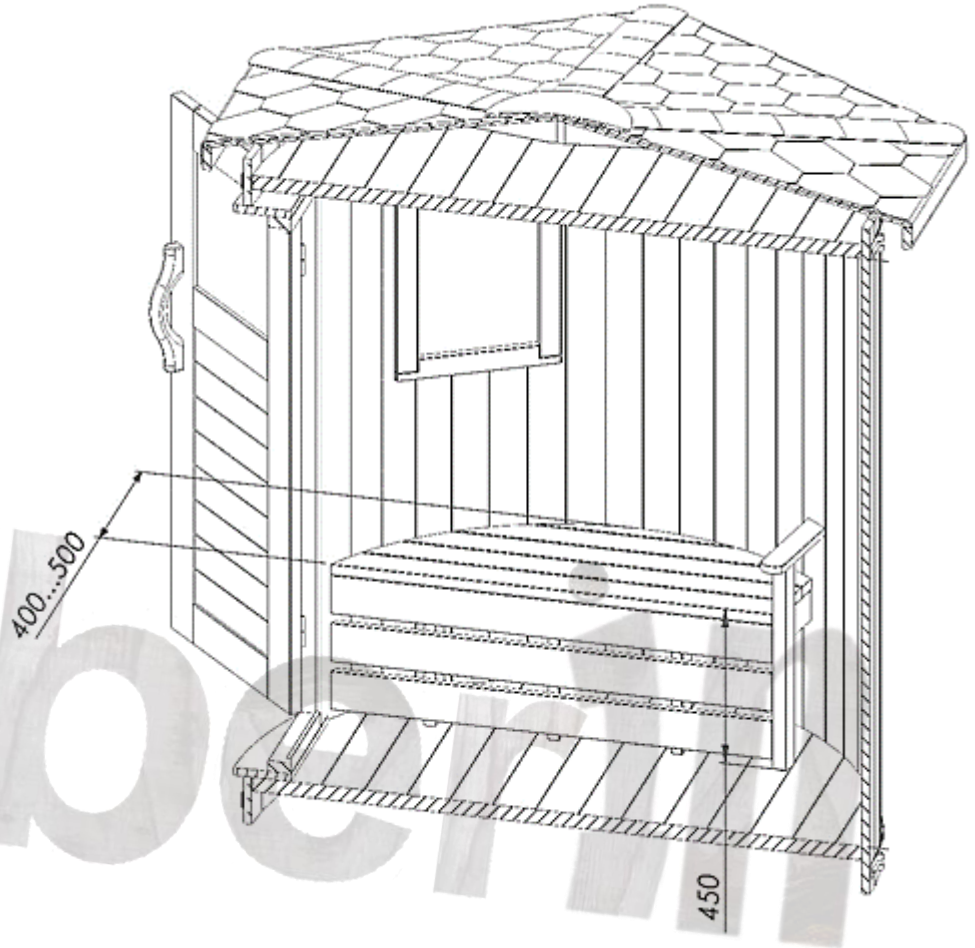

MODEL – VERTICAL	SIDE NO. 1
Interior height	1830 mm
Upper bench width	400 – 500 mm
Upper bench height (from the ground)	900 mm
Lower bench width	150 mm
Lower bench height	450 mm

MODEL – VERTICAL	SIDE NO. 2
Bench width	400 – 500 mm
Bench height	450 mm

MODERN CURVED BENCHES

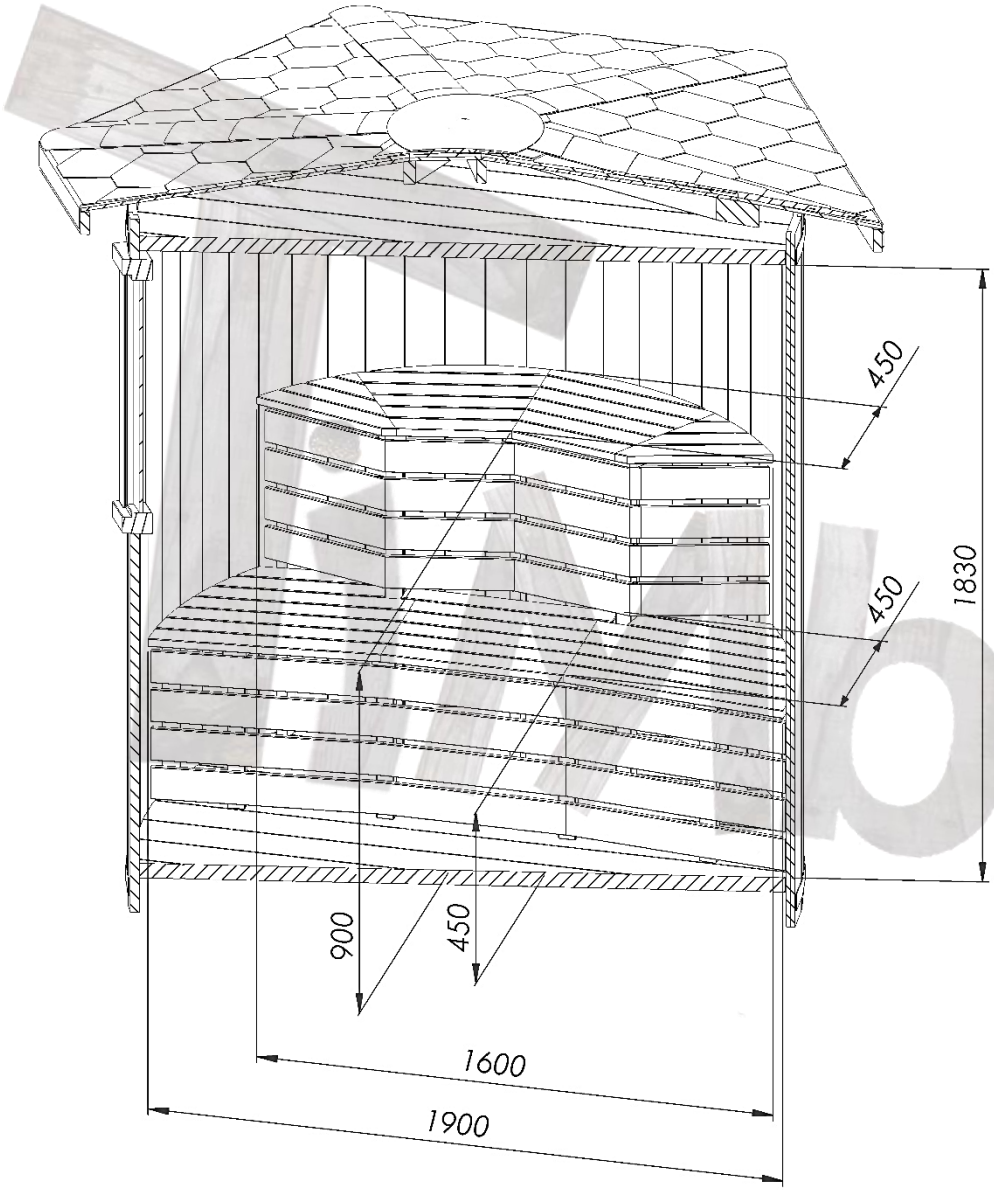

MODEL – VERTICAL	MODERN CURVED BENCHES
Interior height	1830 mm
Upper bench length	1600 mm
Upper bench width	450 mm
Upper bench height (from the ground)	900 mm
Lower bench length	1900 mm
Lower bench width	450 mm
Lower bench height	450 mm

finnberin

BASE STRUCTURE

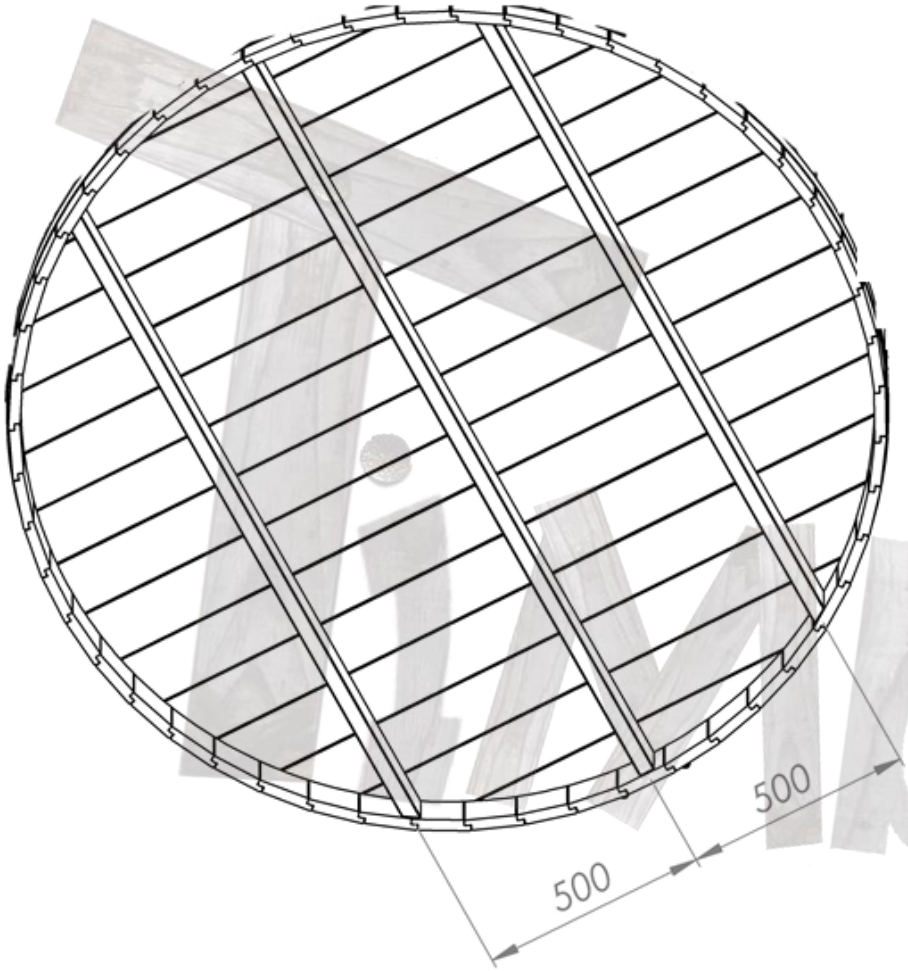

MODEL – VERTICAL	BASE STRUCTURE
Distance between base beams	500 mm

Alberin

DELIVERY INFO

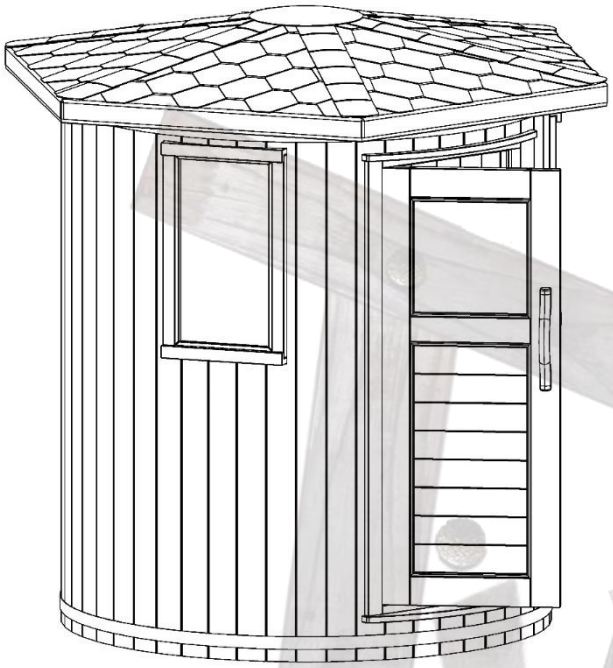

MODEL - VERTICAL SAUNA	DELIVERY INFO
Assembly kit (flat packed) sauna measurements	Height: 2200 mm Width: 1300 mm Length: 2200 mm Weight ~700 - 900 kg
Assembled sauna measurements	Height: 2450 mm Width: 2420 mm Length: 1620 mm Weight ~700 - 900 kg

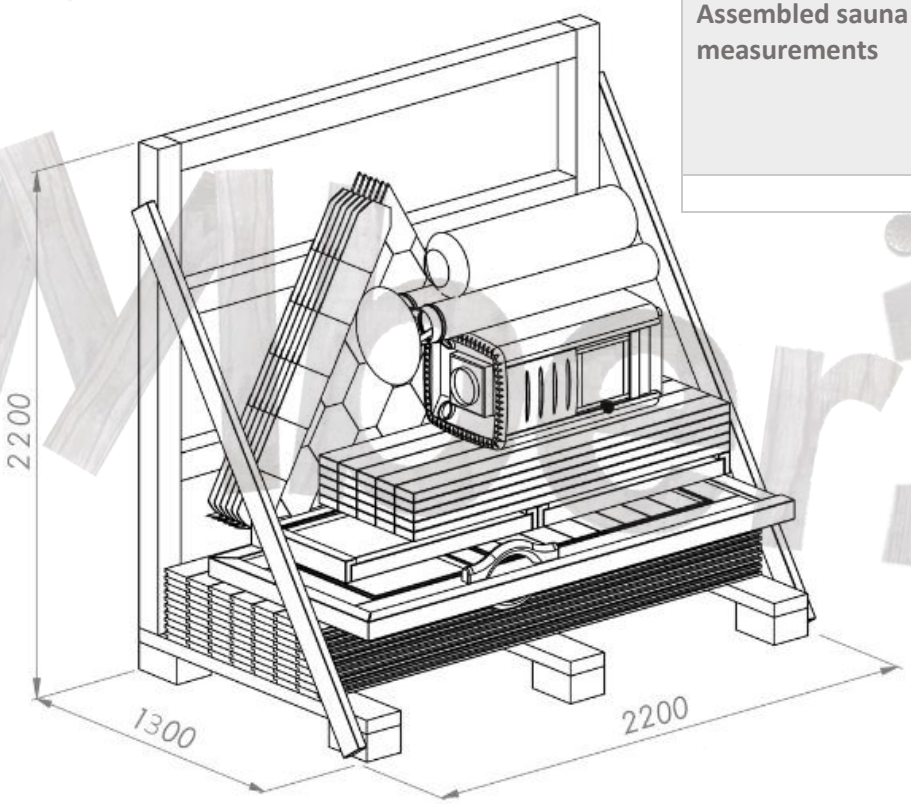

WOOD BURNING HARVIA HEATERS

Harvia M3 + chimney	Harvia M3 SL + chimney (logs loaded from outside instead of inside)
 The Harvia M3 has a classic design and is suitable for smaller, woodburning saunas. It turns a sauna bath into a pleasurable experience and adds a touch of traditional sauna atmosphere. The even heat and efficient air circulation guarantee an enjoyable bath. **Output 16,5 kW** **Stones max. 30 kg** **User manual HERE**	 The SL models are designed for people who want to conveniently heat their sauna from another room or outside the building. SL stoves provide great bathing in small and medium-sized saunas. **Output 16,5 kW** **Stones max. 30 kg** **User manual HERE**

limberin

ELECTRIC HARVIA HEATERS

Harvia Vega 8 kW (BC 80)	For steam – herbal sauna room Senator combi 9 kW (T9C) including a separate control unit (Xafir CS110C)
 Harvia Vega is a modern and easy-to-use heater by the world's largest sauna heater manufacturer. The stainless steel outer shell of Vega is durable and creates a modern look for your sauna. The operating switches are placed ergonomically in the upper part. **Output 8 kW** **Stones max. 20 kg** **User manual HERE**	 Harvia Senator Combi is a combined electric heater and steamer offering multiple ways of sauna bathing. Your sauna can become a traditional Finnish sauna, a steam sauna, a herbal sauna or a fragrant sauna – all sauna experiences in the same package. **Output 9 kW** **Stones max. 35 kg** **User manual HERE**

finberin

THERMAL INSULATION

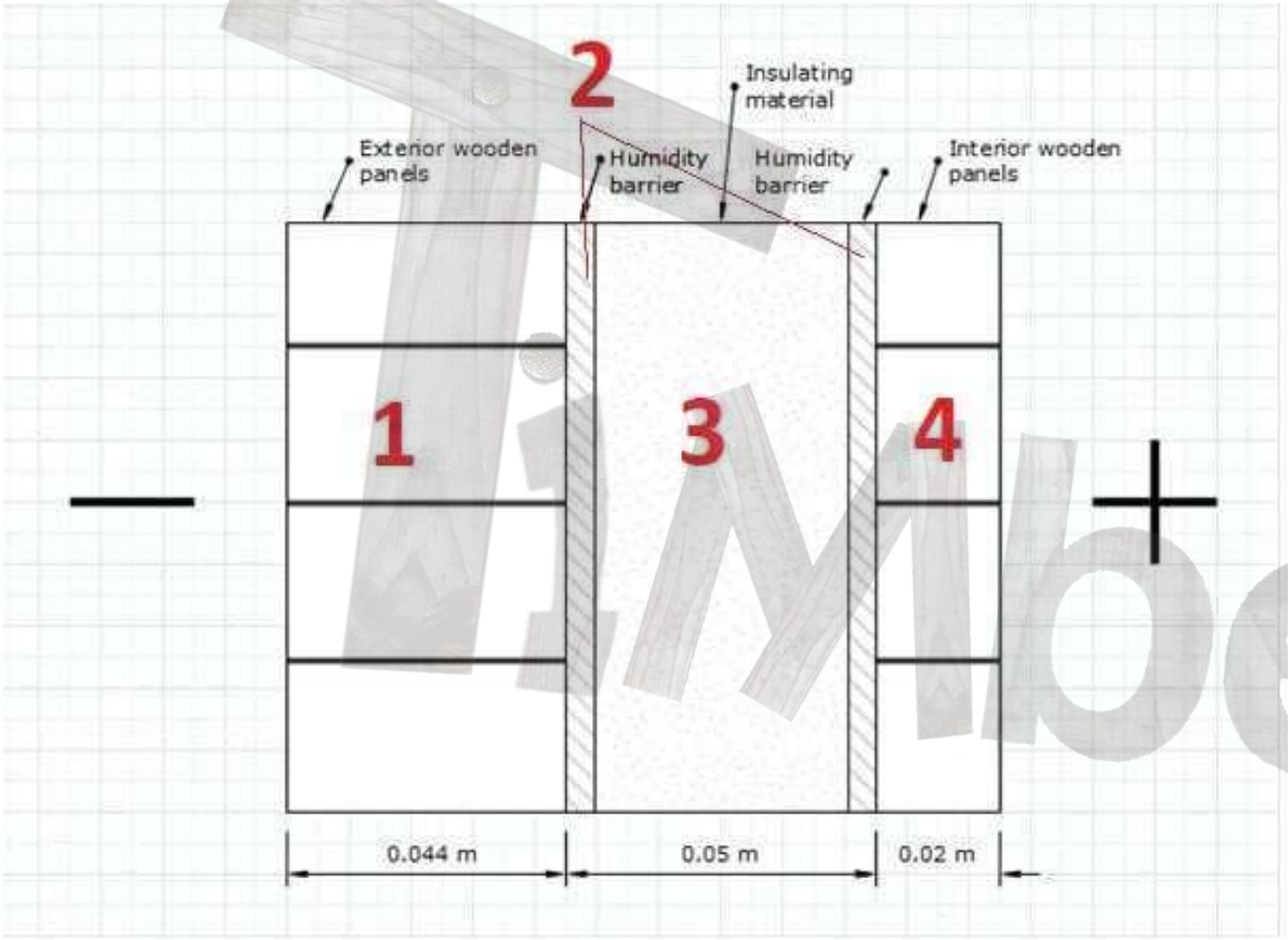

THE CROSS-SECTION VIEW OF INSULATED OUTDOOR SAUNA`S WALL

The first one (1) represents the wooden panels (44 mm thick).

The second one (2) – humidity barrier. The main aim of the humidity barrier is to eliminate the penetration of water or vapor to the insulation layer (3).

The nature of humidity barrier from outside and inside is different. The outside layer waterproofs the insulation and the inside humidity barrier does not allow the vapor to penetrate to the insulation layer. They both are very thin therefore their thickness is not mentioned.

The fourth (4) and the last layer is interior wooden panels, they are 20 mm of thickness. They are needed to support the insulation layer. It must be noted that the humidity barrier from the outside does not necessarily always have to be there. It depends on the type of sauna. The external wooden panels which form the wall of sauna are usually covered with bituminous shingles which act as waterproofing layer as well.

If you need more information then check our article HERE

ADDITIONAL INFORMATION

The following pages add current TimberIN information (data as of 11/2026) to the original technical sheet on the previous pages. If a detail differs, please ask us; the approved order drawing applies.

In this section

HARVIA HEATERS 15
SAFETY DISTANCES, WOOD HEATERS 16
THERMAL INSULATION (OPTIONAL) 17
ROOF COLOURS AND ACCESSORIES 18

HARVIA HEATERS

Heater	Type	Output	
Harvia M3 + chimney	Wood, loaded inside	16.5 kW	Included
Harvia M3 SL + chimney	Wood, logs loaded from outside	16.5 kW	Upgrade
Harvia 20 PRO + chimney	Wood, loaded inside	24.1 kW	Upgrade
Harvia 20 SL + chimney	Wood, logs loaded from outside	24.1 kW	Upgrade
Harvia Top Steel M80 (TOPSteel Black)	Electric, controls on the heater	8.0 kW	Included

One heater is included in the price: the M3 with chimney or the Top Steel M80; choose exactly one. The hot room is compact (about 1,960 mm across and 1,830 mm high), so please ask us before choosing a larger wood heater.

Electric supply: Top Steel M80 8.0 kW 400 V 3N~, 3 × 16 A, cable 5 × 2.5 mm². A qualified electrician designs the supply, cable and protection from the heater manual.

SAFETY DISTANCES, WOOD HEATERS

Heater	Minimum distances to flammable materials
Harvia M3 / M3 SL	Sides 250 mm · behind 300 mm (can be reduced with a fibre-cement board behind the heater) · in front about 300 mm
Harvia 20 PRO / 20 SL	Sides 300 mm · behind 300 mm (can be reduced with a fibre-cement board behind the heater) · in front about 300 mm
Floor	The floor under the heater is covered with a fibre-cement board
Chimney	Non-insulated chimney: at least 500 mm from flammable materials (less with a fibre-cement board). Insulated chimney: at least 100 mm of insulation between roof and chimney; the insulation extends at least 430 mm below the roof
Electric heaters	Follow the Harvia manual of the chosen heater

THERMAL INSULATION (OPTIONAL)

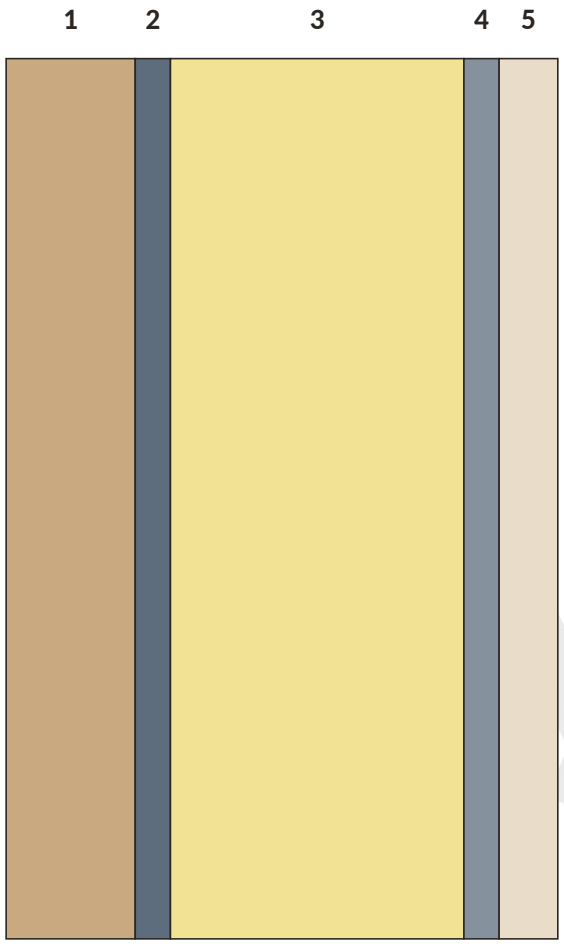

1. Exterior wooden boards, 44 mm

2. Humidity barrier (outside): keeps the insulation dry

3. Insulation

4. Humidity barrier (inside): stops vapour reaching the insulation

5. Interior wooden panelling, 20 mm

The outside humidity barrier is not needed on every model. Insulation is an option, fitted at the factory and recommended for pre-assembled saunas. The exact material and thickness are confirmed in the order.

ROOF COLOURS AND ACCESSORIES

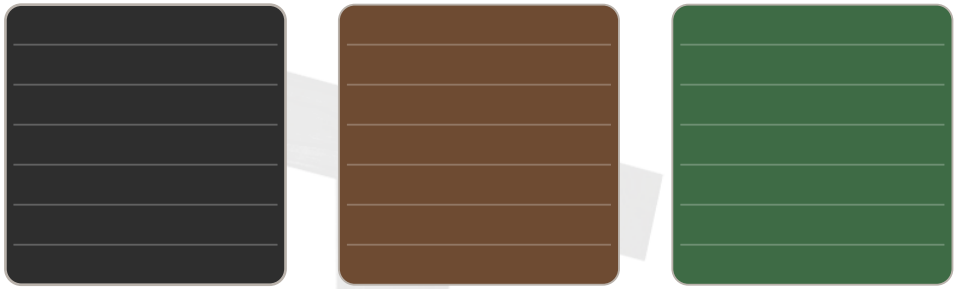

Black **Brown** **Green**

Bitumen shingles on the roof; one colour per sauna.

Accessories (optional)
Stainless steel water tank for wood-burning heaters (steam effect)
Electric installation: LED lights under the benches
2 Harvia lamps above the entrance door